056
September 1984

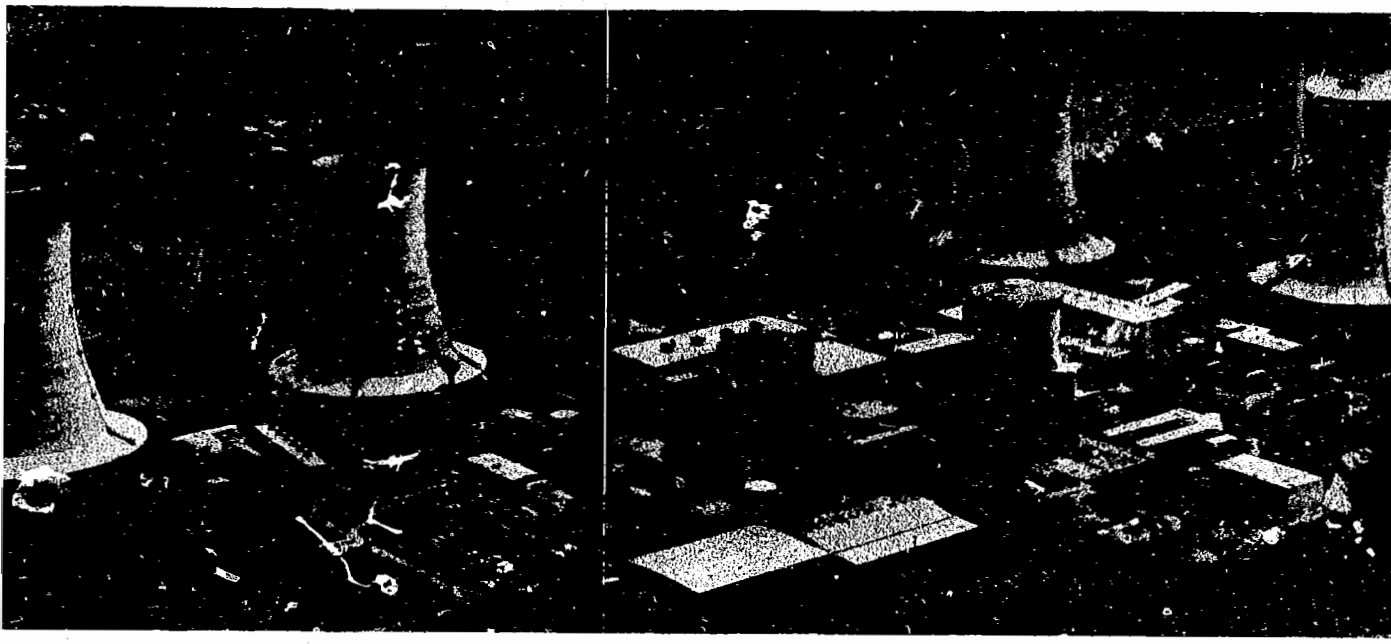

This is an informal report intended for use as a preliminary or working document

GEND

General Public Utilities • Electric Power Research Institute • U.S. Nuclear Regulatory Commission • U.S. Department of Energy

MI-2 CABLE/CONNECTIONS PROGRAM
Y-84 STATUS REPORT

ugh J. Helbert
. Scott Cannon
onald R. Chick
Michael R. Donaldson
Richard D. Meininger
Collins P. Cannon

repared for the
.S. Department of Energy
hree Mile Island Operations Office
nder DOE Contract No. DE-AC07-76ID01570

GEND-INF--056

DE85 005506

DISCLAIMER

TMI-2 CABLE/CONNECTIONS PROGRAM
FY-84 STATUS REPORT

Hugh J. Helbert
N. Scott Cannon
Donald R. Chick
Michael R. Donaldson
Richard D. Meininger
Collins P. Cannon

Published September 1984

EG&G Idaho, Inc.
Idaho Falls, Idaho 83415

Prepared for the
U.S. Department of Energy
Three Mile Island Operations Office
Under DOE Contract No. DE-AC07-76ID01570

ABSTRACT

This report documents the efforts to date by the Department of Energy to assess the condition of the electrical channels within the Reactor Building at Three Mile Island Unit two (TMI-2) as affected by the accident of March 28, 1979. It focuses primarily on the results to date of the initial in situ test phase where 567 channels were examined electrically from outside the Reactor Building. This in situ testing, completed in June 1984, was designed to economically sample a large number of channels in order to obtain a statistically valid assessment of the condition of the electrical channels within the TMI-2 Reactor Building. The in situ data analysis will be complete in 1985, but sufficient information has been compiled in this report to demonstrate that a damage assessment of the electrical channels can be made. In addition, the data supports the theory that had a basic preaccident data base been available for the electrical channels, this damage assessment would have been highly effective and speedy.

This report includes the analysis of data from 233 cable channels out of the 567 channels tested including 10 penetrations. The remaining channels will be discussed in later reports as the data is analyzed.

This report focuses on electrical anomalies detected in the channels and makes recommendations for further testing or examination to define the actual functional impairment to the electrical channel. A final assessment of damage to the electrical channels at TMI-2 will be made after completion of those tests.

The work reported on in this report was performed jointly by the Hanford Engineering Development Laboratory (HEDL), the Idaho National Engineering Laboratory (INEL), and the Sandia National Laboratory. They have been assisted by an industry advisory group in developing the program plan to asses the condition of the cable/connections at TMI-2.

SUMMARY

The TMI-2 Cable/Connection Program was established to investigate the consequences of the TMI-2 loss-of-coolant accident (LOCA) on cable and connector components within the Reactor Building. The capability to receive readout signals from, and supply energizing voltages to, Class 1E instrumentation components is essential to reactor control during periods of environmental stress. Therefore, it is important to characterize the functional properties of cable channels during reactor accident and post accident conditions.

This report summarizes results to date of diagnostic tests conducted on selected cable channels within the TMI-2 Reactor Building. Channels in a total of 155 cables in 10 penetrations were tested and analyzed. Anomalous electrical behavior was observed in 100, or 65%, of these cables. Of these, 59 cables, or 38%, contained circuits classified as inoperable. In addition, the status of supporting laboratory tests and data taken on cables removed from the hydrogen burn region are discussed. An additional 8 penetrations and 334 cable channels have been tested and are being analyzed, and will be reported as they are completed.

During the first day of the accident, the environment inside the Reactor Building was one of intense radiation, steam, moderate temperature excursions, and a hydrogen burn that resulted in a pressure spike which initiated a chemical suppression spray. Post accident environmental conditions include low-level dose rates that integrate to 10^5 rads, and moisture exposure either by submersion or high relative humidity.

The cable/connection program addresses how well the cable channels survived these environments by evaluating the electrical and physical properties of selected components and cable systems from within the Reactor Building. The effort includes in situ testing and laboratory testing. The laboratory testing is further subdivided into electrical and mechanical properties testing. The bulk of this report deals with in situ test results which establish the present status of circuits, and identifies

cables and connector components for removal and follow-on laboratory evaluation. The proper selection of cable and connector components for laboratory evaluation is considered essential to the success of the program.

The in situ tests consist of diagnostic measurements, which include characterization of a circuit's capacitance, inductance, insulation resistance, and loop resistance properties. Additionally, a time domain reflectometry (TDR) technique addresses identification of defect type and the location of defects in cable channels.

Penetration R607 and R405 and their associated circuits/cables experienced the most severe environmental conditions of the penetrations that were evaluated. Both penetrations are located at the 292-ft elevation. R405 is near the closed stairwell. R607 is near the open stairwell. Many of the cables and end instruments were submerged with the penetration half submerged. Portions of the cable runs, especially those near the open stairwell, were very probably subjected to the steam and water discharge path from the reactor coolant system. In addition, some of the cables may have been subjected to the flame propagation path during the hydrogen burn event. In penetration R607 of 52 cable channels tested, 47 exhibited anomalous behavior. Of these, 33 were evaluated as being inoperable. The diagnostic data indicates water damage and corroded contacts; circuit crosstalk was observed which is consistent with this type of damage. In penetration R405 five cables were tested and all exhibited anomalous behavior with four of the circuits judged inoperable.

Of 14 instrumentation cables tested in penetration R534, anomalies were observed in seven; five of these circuits were judged to be inoperable. Crosstalk voltages were observed suggesting possible penetration corrosion and/or water contamination. However, the data suggested that environmentally sealed splices survived well.

Penetration R506 contains reactor control circuits, including current transformers, level (pressure) transmitters, and temperature, pressure, and limit switches. Nineteen cables were tested; 16 were found to exhibit anomalous behavior and six were judged to be inoperable. Anomalies were characterized by crosstalk voltages.

Of 39 pressurizer heater cables, anomalous behavior was observed on 12. Of these, five were judged to be inoperable: one with an open circuit, one with a shorted insulation resistance of 22 ohms, and three with low insulation resistance.

The data taken on over half of the circuits tested to date correlate with good functional properties. It is important to note that the penetrations already evaluated were selected because the probability of finding impairment was judged to be high. Therefore the statistics reported are not necessarily representative of the degree of damage to the entire 1800 circuits in the TMI-2 Reactor Building, but should be a good indication of the types of damage to be expected.

A list of cables designated for removal and laboratory study was determined from the in situ test results. Circuits for additional Phase II in situ evaluation were also selected.

Laboratory facilities and test apparatus have been set up for the evaluation of cable and connector components removed from the TMI-2 Reactor Building. Evaluation of the polar crane cable, and other cables that were located in the upper Reactor Building indicated that they had received little to mild damage from the LOCA. Of those tested, these cables should have been most exposed to the hydrogen burn event because of their location. This result suggests that the hydrogen burn did not substantially damage cables in the TMI-2 Reactor Building, particularly those of the type tested.

CONTENTS

FIGURES

TABLES

TMI-2 CABLE/CONNECTION PROGRAM
FY-84 STATUS REPORT

INTRODUCTION

Shortly after the March 1979 accident at Three Mile Island Unit 2 (TMI-2), the U.S. Department of Energy established the Technical Information and Examination Program (TI&EP) to assist in solving technical cleanup challenges and collect and analyze data that would benefit nuclear power plan safety. An important part of the TI&EP is the Instrumentation and Electrical (I&E) program. In 1981, I&E personnel initiated a major cable analysis effort, called the Cable/Connection Program. The effort supports accident prevention and mitigation philosophy by establishing the physical limitations and performance of interconnecting cables for instrumentation and electrical equipment exposed to an actual loss-of-coolant accident (LOCA) environment. Also, examination, testing, and analysis will provide data for better assessment of reliability and performance and for improvements in the design, manufacture, and installation of instrumentation, electrical equipment, and cable systems equipment.

The components and cable systems in the TMI-2 Reactor Building were exposed to varying degrees of radiation, steam, humidity, Reactor Building suppression and gross decontamination sprays, submergence, a hydrogen burn event, and a post-LOCA environment. Study of the electrical and physical properties of selected cable system components will allow assessment of how the cables and connections responded to these accident environments.

PROGRAM SCOPE

The objective of the Cable/Connection Program is to assess the effect of the TMI-2 accident on the cables and connections within the Reactor Building. The principle emphasis is on functional impairment, i.e., what effect did the LOCA and post-LOCA environment have on the capability of the cable channels to function reliably in their respective circuits.

Since removal of cable and connector components is expensive and time consuming, proper selection of components is critical to the success of the program. For this reason, emphasis has been on the diagnostic "scan" tests, which screen and assess present cable channel conditions. This effort locates and characterizes the impaired region or establishes that the circuit appears to meet all functional requirements and is free of impairment. Specifically, the program was designed to determine what fraction of the cables appear to have remained functional and, of those that appear impaired, what can be determined about the nature of the impairment. This effort involved two phases: (a) a review of data already taken relating to the condition of the cable/connection channels, and (b) conducting in situ scan tests. The objective of these tests was to quickly and cost effectively obtain diagnostic data on cable circuits that characterize the present status of the circuit.

The diagnostic test effort is divided into two phases. Phase I of the test effort provided a quick survey of general cable condition. These tests included insulation resistance, capacitance, dissipation, induction, continuity resistance, and time domain reflectometry. Phase II diagnostic tests, also to be addressed by this program, will be performed later, to better characterize the in situ condition of the respective components in question. The location and nature of the impaired region is of prime interest to the program.

The data obtained from the in situ scan tests and review effort is used to identify cables and connector components for removal and follow-on laboratory evaluation. Factors in this selection include: (a) indication

of impairment, (b) variety of material type, (c) variety of circuit type, with emphasis on Class 1E circuits, and (d) the environmental stress postulated for a particular component.

Where possible, the laboratory evaluation tests will use, as a baseline reference, samples of cable and connector components from the same lot as was used for the original installation. Where these are not available, samples that are generically the same will be used. An additional reference for evaluation are the performance requirements of the circuit from which the component was removed.

Laboratory tests will specifically characterize cable insulation resistance, capacitance, dissipation, and voltage breakdown properties. Characterization over the temperature range ambient to 90°C, and the effects of moisture, will be performed when appropriate. The mechanical properties of the cable and connector components will be characterized as well and correlated as much as possible with the observed electrical properties.

Laboratory results will be correlated with the environmental exposure postulated to have been received by the cable or connection component. Maps of the TMI-2 Reactor Building environment showing the location of cables and connections of specific interest will be made and the postulated environment exposure will be identified on the maps for ease in correlation.

Final analyses will address which environmental parameter caused the observed change in the cable/connector component, i.e., is the observed impairment, the result of temperature, chemical spray, moisture, radiation, or a combination of environmental parameters?

ENVIRONMENTAL CONDITIONS

During the first day of the accident, the environment inside the Reactor Building was one of intense radiation, steam, moderate temperature excursions, and a hydrogen burn that resulted in a pressure spike which initiated a chemical suppression spray.

Steam and radioactive reactor coolant were discharged into the building through the reactor coolant drain tank rupture disc (see Figure 1). The steam rose upward from the basement through stairwell #1 to the upper levels. This release of water and steam resulted in an average air temperature increase of 17°C during the initial hours after the accident. Components directly in the steam path experienced higher temperatures.

A total of 600,000 gallons of water accumulated in the basement and may have possibly reached a maximum level of approximately 8.3 ft (291-ft elevation). Consequently, many instruments, electrical components, and cable trays were submerged. Because of the water in the basement and continuous operation of the air handling units, the relative humidity inside the building remained at 100% for a period of two to three years.

Generally, the dose history excluding the basement, consisted of high dose rates for a short period of time followed by relatively small dose rates for a long period of time. Radiation levels at the 282-ft elevation, the basement area, have been 20 to 40 R/h since the accident. Integrated dose rates on the 305-ft elevation have been estimated at 10^5 rads and the upper levels of the Reactor Building may have experienced slightly higher levels.

The hydrogen burn event occurred approximately 10 hours after the start of the accident and resulted in a uniform increase in ambient temperature of approximately 4.5°C. It is believed that the hydrogen burn started in the basement with flame propagation to the upper regions of the Reactor Building. The pressure spike that resulted from the burn activated the Reactor Building pressure suppression spray for about 5 min.

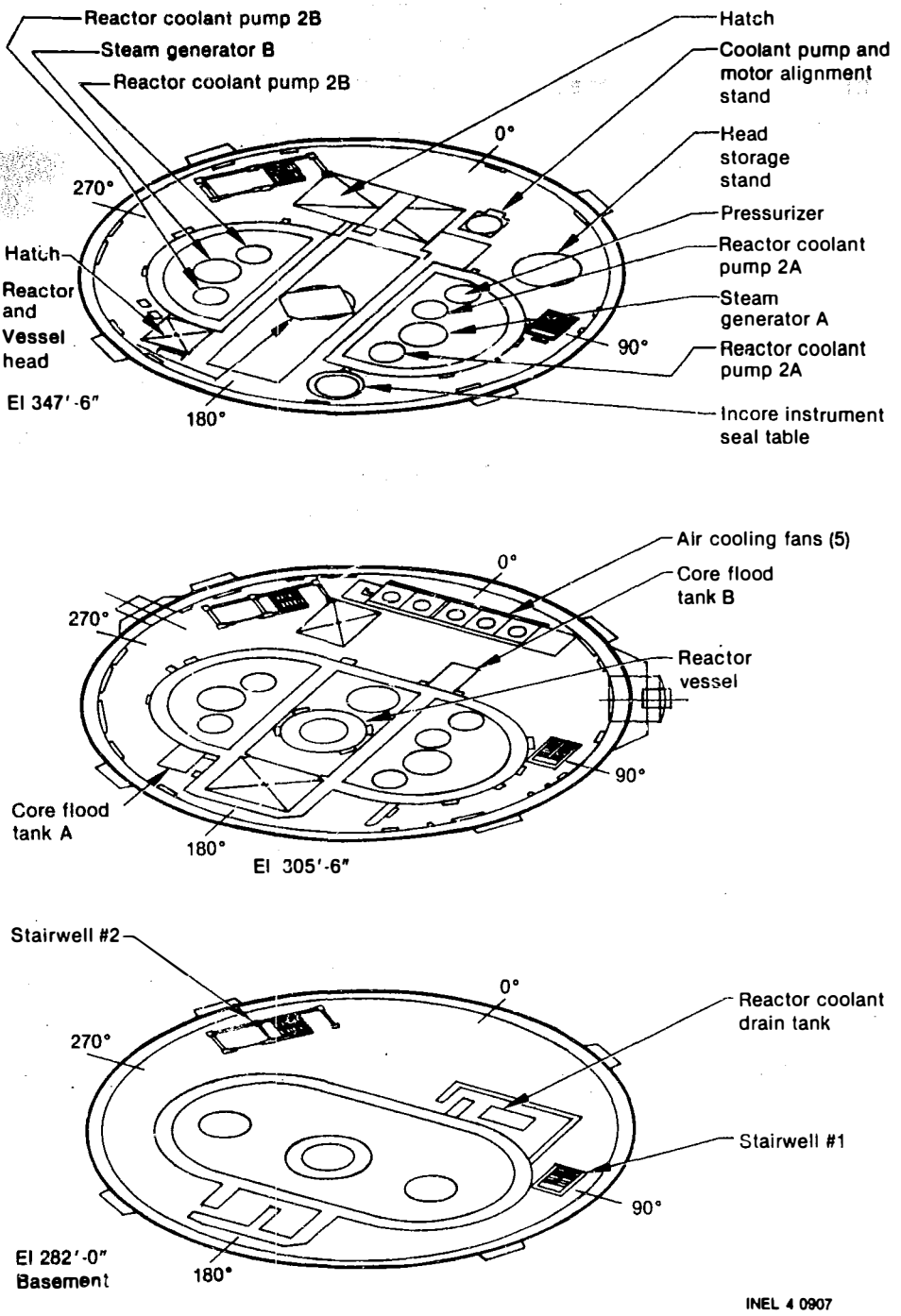

Figure 1. Position and layout of major components in the TMI-2 Reactor Building.

The highest total integrated radiation doses were encountered at the higher elevations. Likewise, hydrogen burn effects were greatest in the upper elevations. The total integrated dose of the radiation from the sump water is also expected to be significant and submergence of active components is expected to be a principle cause of failure.

Electrical Test Description

A series of electrical tests are fundamental to both laboratory and in situ (at the TMI-2 Reactor Building) testing. These are:

- Initial voltage characterization
- Time Domain Reflectometry signature
- Capacitance
- Inductance
- Insulation Resistance
- Direct Current Loop Resistance.

With the possible exception of time domain reflectometry (TDR) measurements, the above tests are straight forward and familiar to most analysts.

Simplified, the TDR test is performed by transmitting a step voltage into the test circuit and observing the reflections that return to the sending instrument. These reflections occur at any change in characteristic impedance and (significantly) at any discontinuity or defect. The TDR method provides a valuable tool for both determining and locating defects in a cable.

The type of tests and the test equipment used to perform the in situ testing are described in Appendix A. The data taking process was automated and the data was stored on tape or disc.

The characterization of voltage breakdown properties is only conducted in the laboratory phase of component evaluation and is not included within the scope of the in situ tests.

A generic procedure, Postaccident Testing of Electrical Equipment was designed and approved for implementation at TMI-2. The procedure allows testing to be conducted at the penetrations and provides an easy access to a large number of cables by way of cable connectors or terminal strips.

IN SITU TEST PHASE

The approach for the in situ testing program was to select 10 to 20% of all types of cables from a registry of approximately 1800 electrical circuits. The in situ testing of these cables provided data for: (a) performing a broad assessment of cable and channel conditions; (b) identifying candidate cables for removal and off-site laboratory examination; and (c) further characterization by conducting more comprehensive Phase II in situ tests. This report presents the results of the initial phase of in situ testing.

Circuit Selection

The TMI-2 Reactor Building contains a total of 58 electrical penetrations. Electrical circuits inside the Reactor Building structure are routed through these penetrations. Figure 2 shows the physical layout of these penetrations with respect to their location around the Reactor Building.

Electrical penetrations through the Reactor Building walls carry circuits ranging in size and function from high voltage feeders for the reactor coolant pumps to small triax cables for lower signal level neutron monitoring devices. The penetrations are designed to maintain a barrier between the Reactor Building and the outside atmosphere under all postulated accident conditions. The penetrations used at TMI-2 are General Electric module type penetrations. A typical penetration layout is shown in Figure 3. This type of penetration consists of a stainless steel cylinder sealed at either end. The electrical conductors are routed through the center of the cylinder and are fixed in place with a ceramic to metal seal. The space between the inner and outer heads is monitored for leakage. The conductor penetrations through the heads are sealed with a nonflammable epoxy compound. Junction boxes are mounted at each end of the penetration for connecting all wires going into and out of the Reactor Building. A typical penetration weighs approximately 400 pounds, is

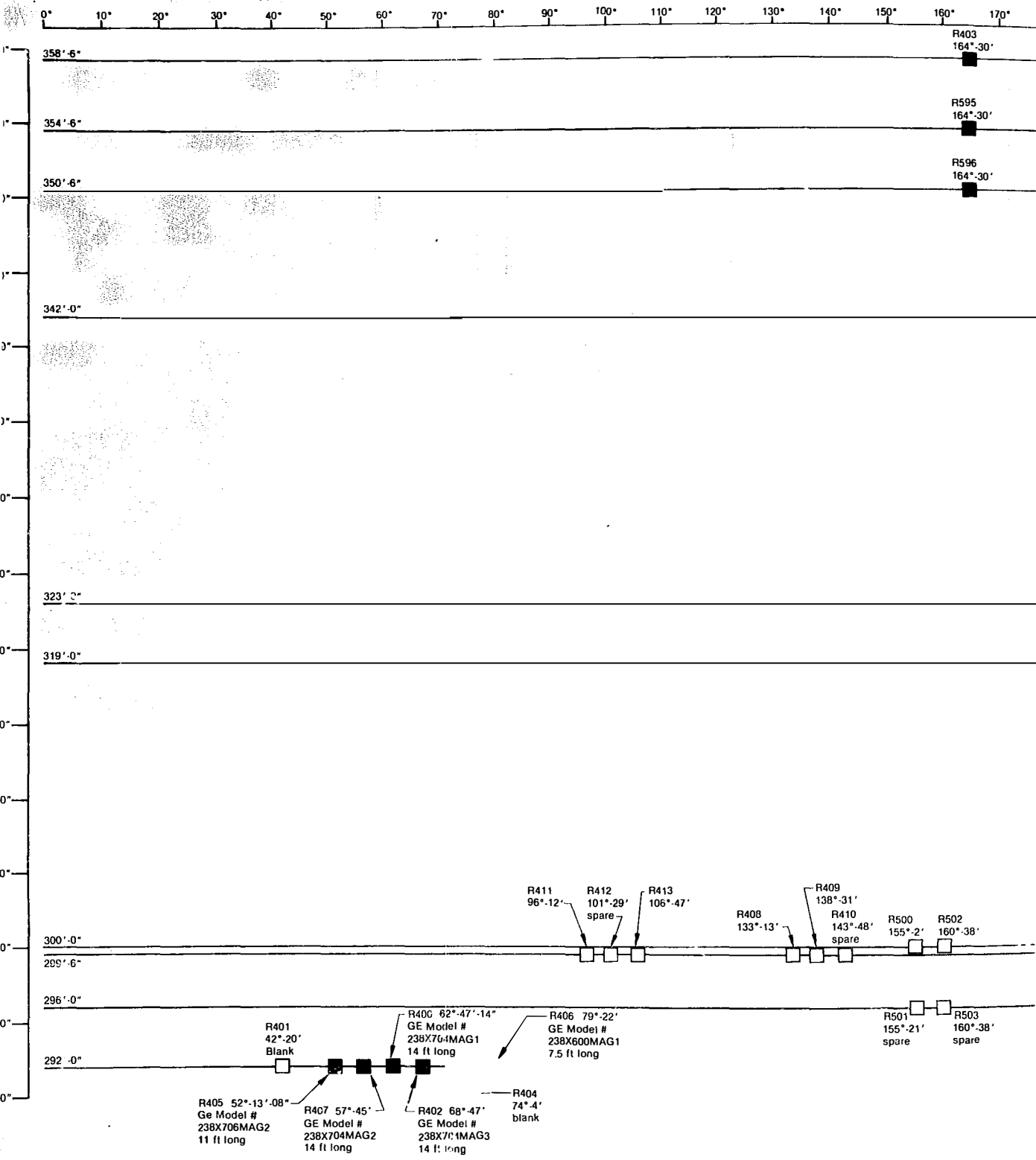

Figure 2. Physical layout of penetrati

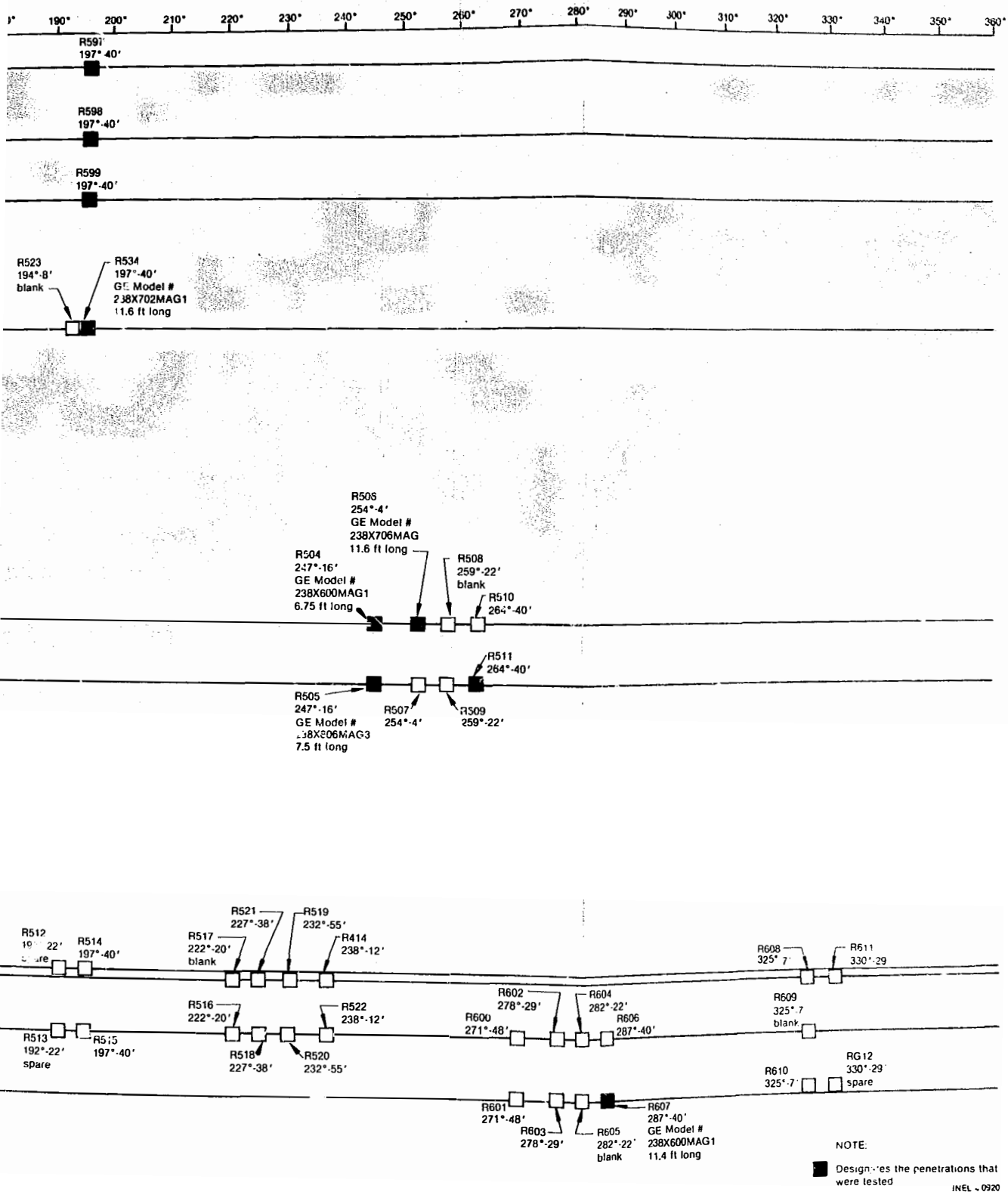

s inside the Unit 2 Reactor Building.

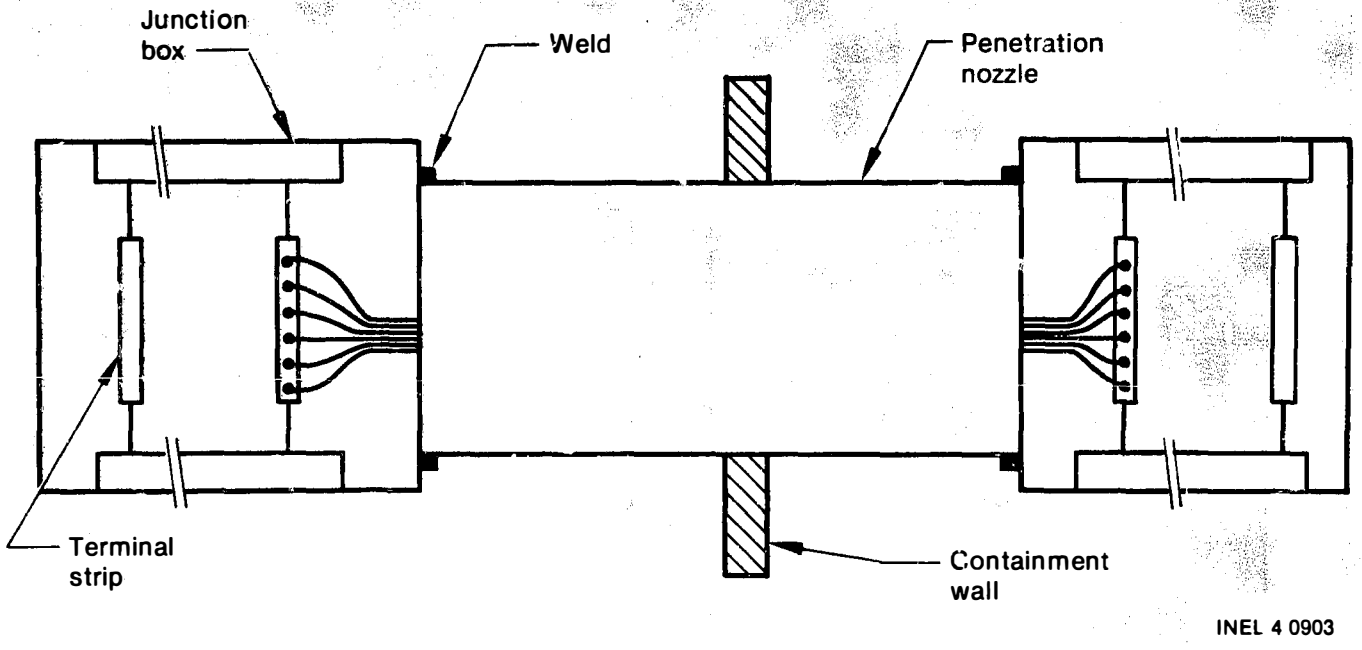

Figure 3. Typical penetration configuration.

normally 1-1/2 ft in diameter, and ranges in length from 7 to 14 ft depending on the electrical function of the circuit routed through the penetration.

Twelve of the 58 penetrations are designated as blanks or spares. Of the remaining 46 penetrations, eight are used for the reactor coolant pump main feeders. These feeders are very large cables, heavily insulated at the junction box, and were not included in the in situ testing program. The 38 remaining penetrations were considered candidates for in situ testing. Fifteen of these penetrations are in high radiation areas and could not be accessed during initial in situ testing. The cables tested in ten representative penetrations have been selected for discussion in this report. They are R400, R402, R405, R406, R407, R504, R505, R506, R534 and R607, which contain control, instrumentation, and power circuits.

Data Analysis Methodology

Evaluation of the in situ data usually resulted in the classification of a circuit (including the end instrument, where applicable) into one of three categories; (a) no apparent change detected, consistent with the circuit being fully functional, (b) anomalous electrical behavior detected, but no evidence that the circuit could not be expected to perform its electrical function, and (c) anomalous electrical behavior detected that would prevent the circuit from performing its intended electrical function. Although an end instrument evaluation was not part of the stated scope of this program, data concerning end instrument condition was obtained in many cases, and is presented where available.

As given in this report, the second classification of circuit operability is intended to give a qualitative estimate of the damage to a circuit as assessed at the time data was taken. It is not intended to suggest that the circuit will continue to remain operable, since, for example, wetted cable insulation will continue to degrade.

The assessment of a cable's condition was often based on changes in several electrical parameters. Water ingress, for example, was usually suggested by a decrease in insulation resistance and characteristic impedance and an increase in capacitance. These three conditions are consistent with a cable that is internally wet. Circuit classifications of inoperability included evidence of contact corrosion (high loop resistance), low insulation resistance, and open circuit conditions. Contact corrosion can impair the ability to calibrate instrumentation, and in the case of power applications can result in an overheated contact/connector failure.

Cables were listed as exhibiting anomalous behavior when an electrical property (or set of properties) fell outside "limits" established by control cable test results or circuit specifications. In addition, where a large number of cables of the same type were tested, properties that stood out statistically from the rest of the group were flagged as anomalous. The methodology for evaluating circuits is described in detail in Appendix B.

In Situ Results

Of 155 cables examined, 100 were found to exhibit an anomalous condition, and 59 were assessed as inoperable. A primary cause of circuit degradation was attributed to water ingress. A primary cause of circuit inoperability was apparent corrosion of connector contacts at terminal boxes and penetrations. Additional problems were also noted. A complete list of all cables tested is presented by penetration in Appendix C. Component removal and laboratory evaluation are required to confirm the indications of the in situ tests.

Penetrations R400, R402, and R407: Pressurizer Heaters

All of the circuits in penetrations R400, R402, and R407 are used for pressurizer heaters except for spares and penetration temperature measurement leads. The cable circuits are essentially alike except for

cable length. In-situ scan tests were performed on 39 pressurizer heater cables, 12 of which were observed to exhibit anomalous behavior. Five cables were judged to contain inoperable circuits, primarily because of high loop resistances indicating probable corroded contacts or connections. One of these cables exhibited a shorted insulation resistance of 22.5 ohms. To verify these evaluations, selected cable sections are recommended for removal for laboratory testing.

The pressurizer heater cables provide power to the heating elements that provide sufficient heat to the pressurizer to maintain the Reactor Coolant System pressure high enough to prevent boiling in the rest of the system. Failure of a significant number of heaters would result in the inability of the pressurizer to maintain sufficient pressure to prevent steam voiding in the other parts of the Reactor Coolant System. Failure of a pressurizer heater circuit is defined as the inability to supply power.

Beyond the penetrations, the cables are divided into two sections. The first section, from the penetration to the termination box, consists of three conductor cables that have pull-slip lengths from 70 to 152 ft. (Actual installed cable length in the Reactor Building may have been shorter than the pull slip length since installation often involves cutting the cable to fit after the pull slip was made out.) The second section from the termination box to the heaters is made up of three each 2 conductor cables. Each conductor of the appropriate cable in the first section feeds two conductors in the second section to form a "delta" three phase connection. The cables in the second section have pull-slip lengths of 35 to 40 ft.

Penetrations R400, R402, and R407 are located at the 292-ft elevation, 9.5 ft above the basement floor. They are oriented at approximately 68 degrees from the south azimuth. Penetrations are General Electric (GE) Models #238X704MAG 1, 3, and 2 respectively and are approximately 14-ft long.

Figure 4 shows the general location of the penetrations and approximate cable routes. The cable runs in the basement area have been exposed to constant radiation fields of between 20 and 40 R/h. Cable routings are such that some cables were subjected to direct steam and water discharge from the Reactor Coolant System. Cables may have also been in the direct path of the flame propagation during the hydrogen burn event.

Table 1 lists the pressurizer heater cables found to exhibit anomalous behavior during the in situ testing. A large number of similar cables were involved, so that statistical differences were considered significant.

Seven circuit loop resistance measurements were found to be abnormally high. Circuit analysis suggests that three heater elements are open circuited. The other three measurements indicate poor connections.

Penetration R405: Component Control Circuits

The cables tested in penetration R405 are used for Reactor Building component control circuits. The circuits tested included the reactor coolant pump drain tank pressure alarm, oil pressure alarm, and pump current transformers. The penetration is located at the 292-ft elevation approximately 9.5 ft above the basement floor and is oriented at 52 degrees from the south azimuth. The penetration is a GE Model 238X706MAG and is approximately 11-ft long.

All five of the current transformer cables tested exhibited anomalous effects. Of these, four circuits were judged inoperable and two cables (H337 and H359C) had conductors that are open at the penetration. These results support the theory that chemical ladened moisture entered the penetration inner liner and cable ends, resulting in a corrosion attack on the cable connections.

Figure 5 shows the general location of the penetration and approximate cable routings. The penetration is 1 ft above the high water mark and is in the vicinity of stairwell #1. It is expected that the penetration has

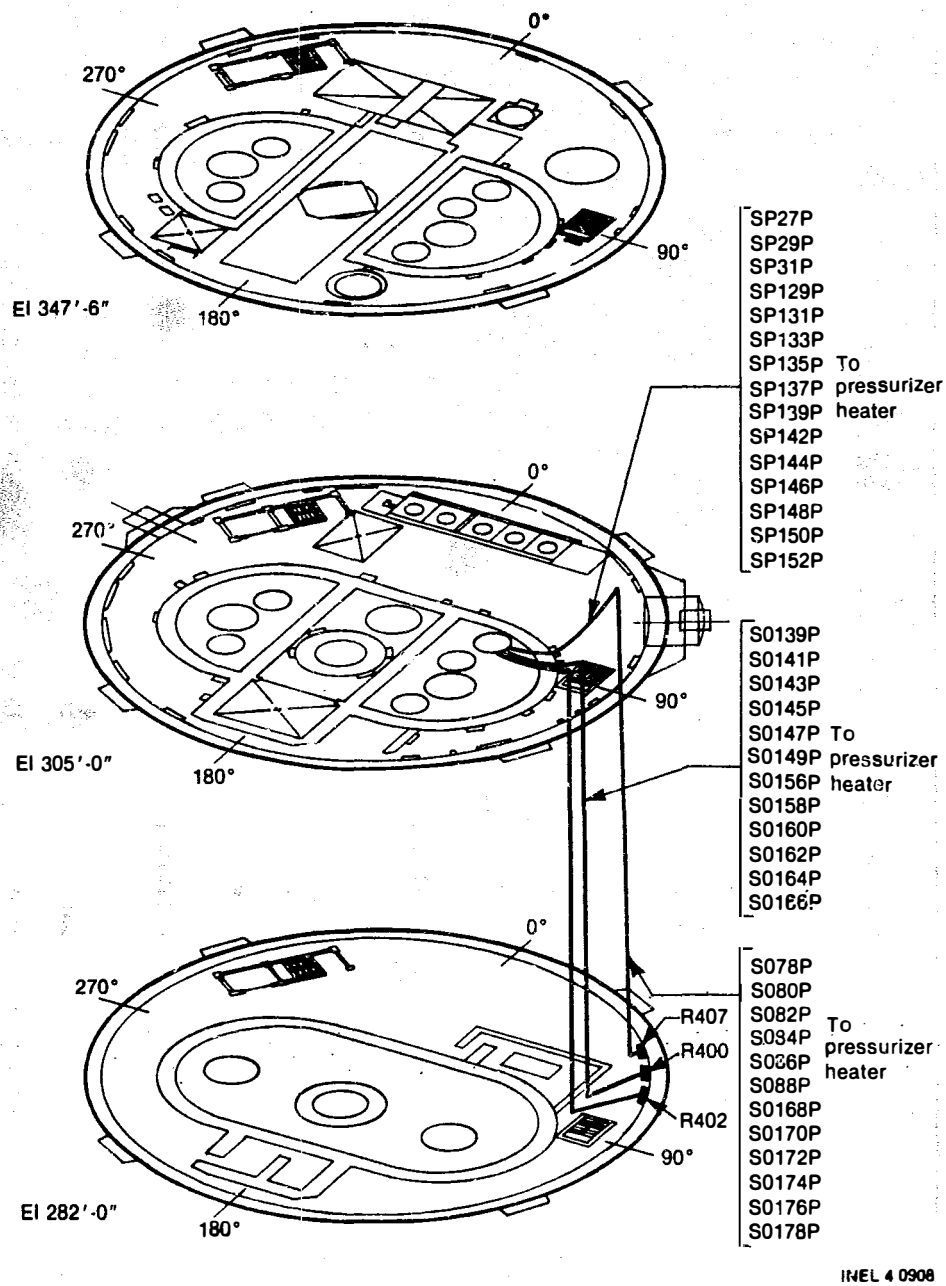

Figure 4. Orientation of penetrations R400, R402 and R407 including general cable run positions.

TABLE 1. PRELIMINARY ANALYSIS PENETRATIONS R400, R402, AND R407: PRESSURIZER HEATERS

Cable/Connection	Anomaly/Conclusion	Value	Limits	Expected[a] Operability
S078P	Low insulation resistance	2×10^5	10^6	Yes
S080P	Low insulation resistance	22.5	10^6	No
S084P	Low insulation resistance/ corroded contacts High loop resistance	1.2×10^5	10^6	Yes
S0141P TB6/7-9	Low insulation resistance High loop resistance	5×10^4 10.40	10^6 9.15 to 10.16	No
S0143P TB8/1-2	Low Z_0/corroded contacts	51.6	54 to 62.2	No
TB8/1-3	Low Z_0	48.7	54 to 62.2	
TB8/2-3	High loop resistance Low Z_0	10.24	9.16 to 10.17	
S0168P	Low insulation resistance/ corroded contacts	5×10^4	10^6	No
TB8/1-2	High loop resistance High inductance	14.75 27	9.14 to 10.16 18 to 23	
TB8/1-3	High loop resistance /open heater circuit High inductance	29.36 37	9.14 to 10.16 18 to 23	
TB8/2-3	High loop resistance High inductance	14.57 27	9.14 to 10.16 18 to 23	
S0172P	Low insulation resistance	5×10^5	10^6	Yes
SP31P TB9/4-5	Low Z_0	47.0	54 to 62.2	Yes
TB9/4-6	Low Z_0	47.2	54 to 62.2	
TB9/5-6	Low Z_0 possibly wet	45.8	54 to 62.2	
SP133P TB4/1-3	High loop resistance/ corroded contacts	10.33	9.19 to 10.19	No
SP144P	Low insulation resistance	3.1×10^5	10^6	Yes

TABLE 1. (continued)

Cable/Connection	Anomaly/Conclusion	Value	Limits	Expected[a] Operability
SP148P	Low insulation resistance	3.1×10^5	10^6	Yes
S0150P TB1/1-2	Low Z_0	50.5	54 to 62.2	Yes
TB1/1-3	Low Z_0	51.0	54 to 62.2	
TB1/2-3	Low Z_0/possibly wet	47.7	54 to 62.2	

a. Judgement based on circuit requirements and extent of damage sustained to test date. Functionality status is expected to change as circuits continue to be wet and/or irradiated.

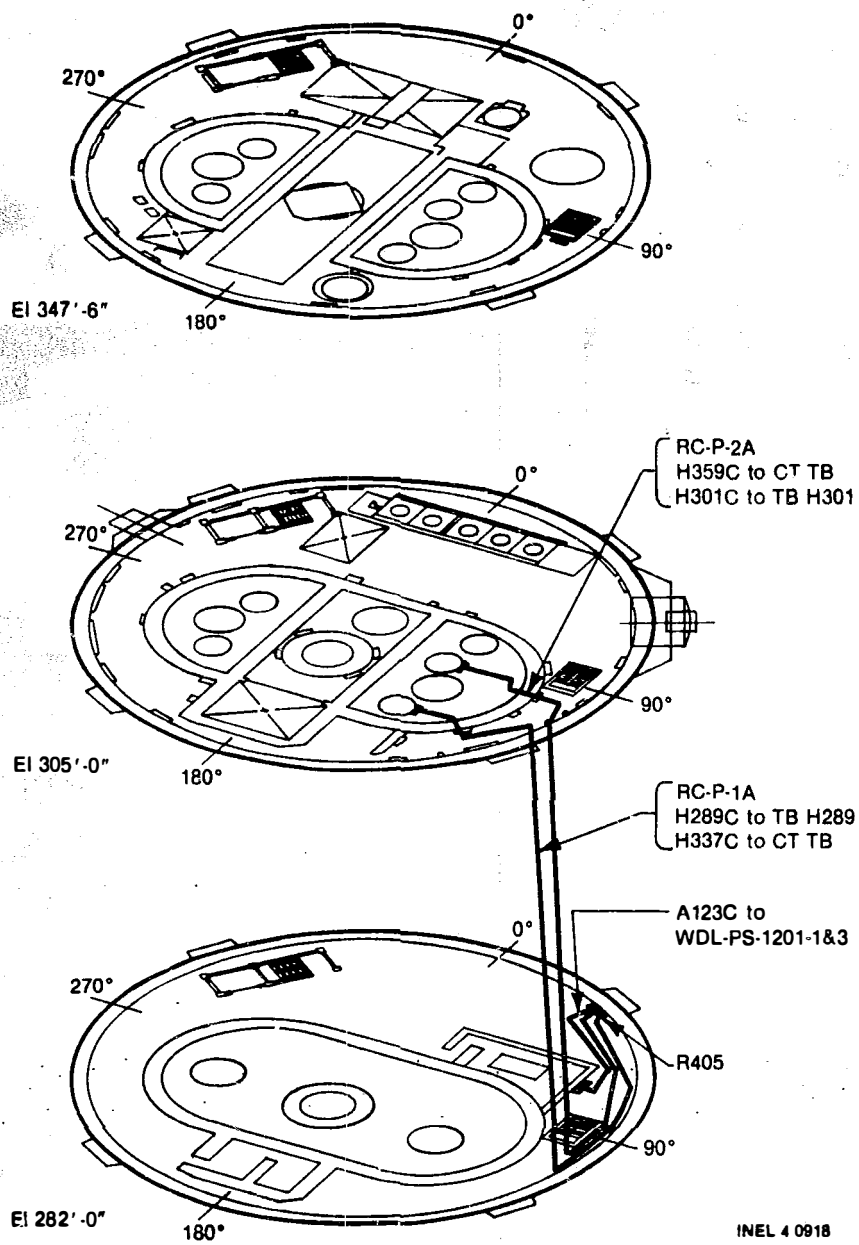

Figure 5. Orientation of penetration R405 in the Reactor Building.

been exposed to 50 to 1000 R/h since the accident based on current radiation indications from the general area of the stairwell. In addition, it may have experienced higher than average accident temperatures because of the proximity to the stairwell and the steam path. Table 2 presents the circuits determined as exhibiting anomalous behavior (all five cables tested). Only one measurement of insulation resistance was available; it was greater than 10^7 ohms and was considered satisfactory.

Loop resistance measurements on four circuits in these cables are effectively open circuited as evidenced by dc loop resistances greater than 1.5×10^7 ohms. They were shown by the TDR data to be open at the penetration.

Penetration R406: Reactor Instrumentation

The cables tested in penetration R406 are used for reactor instrumentation circuits. The circuits tested were differential pressure transmitters, vibration element amplifiers (loose parts monitors), and resistance temperature detectors. The penetration is located at the 292-ft elevation, approximately 9.5 ft above the basement floor and oriented at 80 degrees from the south azimuth. The penetration is a GE Model 238X600MAG and is approximately 7-1/2 ft long. The principal circuits analyzed were the loose parts monitors and the differential pressure transmitters.

A total of 6 cables were tested in this penetration, with only the coax cable IT3566I (a loose parts monitor preamp cable) exhibiting an anomalous behavior. Its high characteristic impedance makes this circuit inoperable because of the resulting impedance mismatch with the end instrument preamp. Also of concern was the high connection resistance at the penetration.

TDR measurements of the remaining cables indicated no impairment. However, these conclusions could not be further substantiated by capacitance loop resistance and insulation resistance measurements because of the presence of uncharacterized end instruments.

TABLE 2. PRELIMINARY ANALYSIS CONCLUSIONS FOR ANOMALOUS CHANNELS IN PENETRATION R405

Cable/Connection	Anomaly/Conclusion	Value	Limits	Expected[a] Operability
A123C	End instrument has corroded contacts	1.195	190 to 235	No
H289C	Corrosion at the penetration to candidate for removal and retest	Open	Not open	No
H301C	Wet cable to candidate for retest and removal	Open	Not open	Yes
H337C TB1/1-4	Loop resistance high	Open at Penetration	Not open	No
TB1/1-4				
TB1/1-4	TDR length short /open at penetration	0	190 to 235	
TB1/3-4	Z_0 high	87.0	49.6 to 82.3	
TB1 2/21-23	Loop reistance high	1.5×10^7	49.6 to 82.3[b]	
H359C TB1/8-10	Loop resistance high	Open at Penetration	Not open	No
TB1/8-10				
TB1/8-10	TDR length short /open at penetration	0	190 to 235	
TB1/9-10	Loop resistance high	1.5×10^7	1.92 to 3.20[b]	
TB1/9-10				
TB1/9-10	TDR length short /open at penetration	0	190 to 235	

a. Judgement based on circuit requirements and extent of damage sustained to test date. Functionality status is expected to change as circuits continue to be wet and/or irradiated.

b. Based on an average of other measurements (+/-25%).

Figure 6 shows a general location of the penetration and approximate cable routes. Similar to the environments previously described, these cables experienced the high temperatures, humidity, and radiation fields characteristic of the basement and the area of stairwell #1. Additionally, the cable routing to the 347-ft elevation may have experienced thermal damage due to the hydrogen burn event.

Penetration R504: Switches

The cables tested in penetration R504 are connected to switches used in motor operated valve control circuits. The penetration is located at the 323-ft elevation approximately 18 ft above the 305-ft elevation floor and is oriented 247 degrees from the south azimuth. The penetration is a GE Model 238X600MAG and is approximately 6-3/4 ft long. The principal circuits analyzed are those connecting limit switches in Limitorque motor operated valves.

All 10 cables tested exhibited anomalous behavior with 3 cable circuits judged to be inoperable. High noise levels and circuit crosstalk indicated there is moisture on corroded contacts in the inner liner terminal boxes. The TDR plots also indicated some unusual mismatches at the inner liner boxes.

Cables MB200C and MB437C had usually high loop resistance values by as much as two orders of magnitude. These anomalies could be localized by additional testing after disconnecting the circuits at the penetration and at the limit switches.

Figure 7 shows a general location of the penetration and approximate cable routes. The east end of the cables were submerged for a period. Cables on the 305-ft elevation were not generally subjected to as high radiation fields as those in the basement (282-ft elevation); however, they should have experienced more of the effects of the hydrogen burn event. Table 3 presents the cables found to exhibit anomalous behavior (all 10 cables tested).

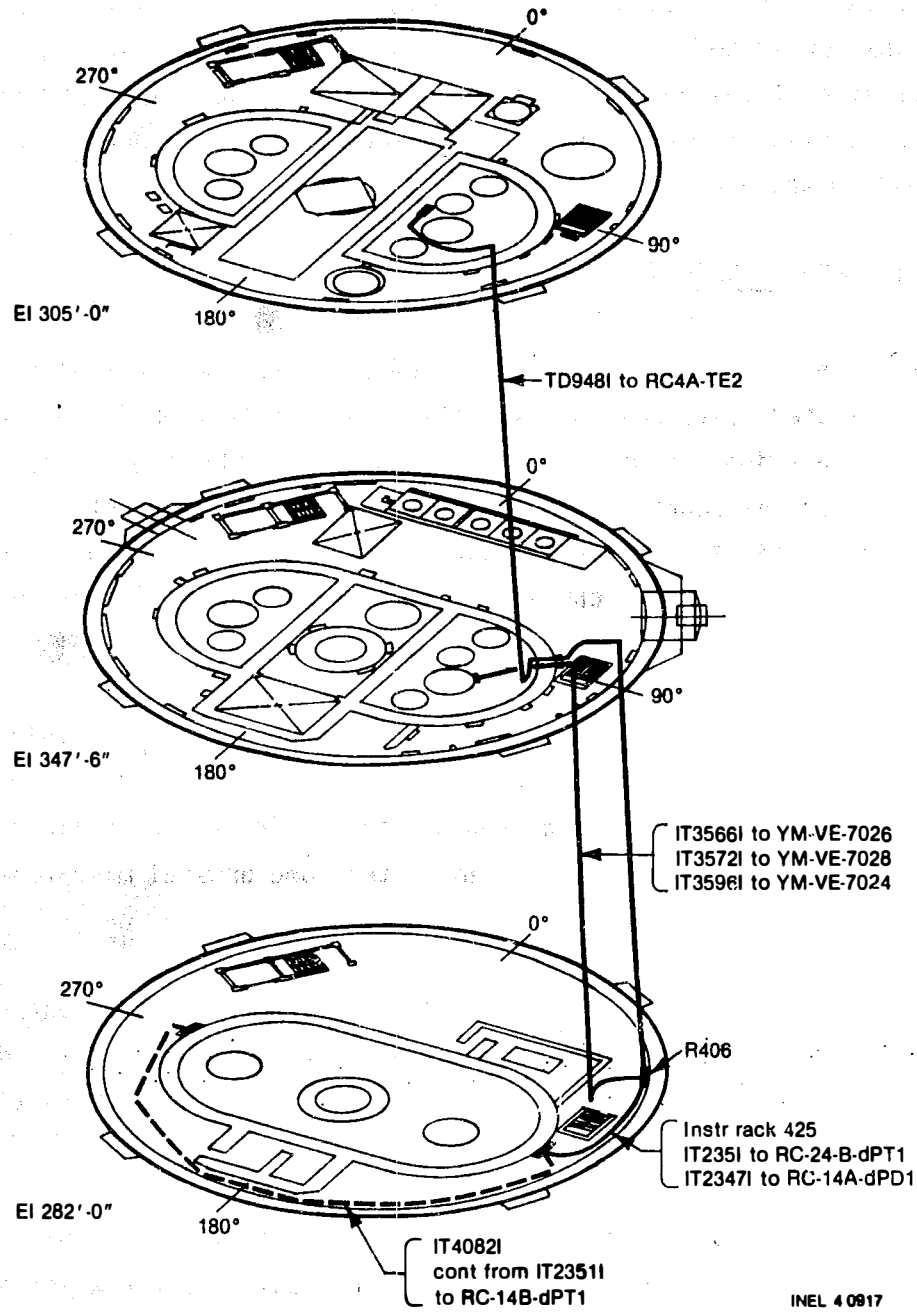

Figure 6. Orientation of penetration R406 in the Reactor Building.

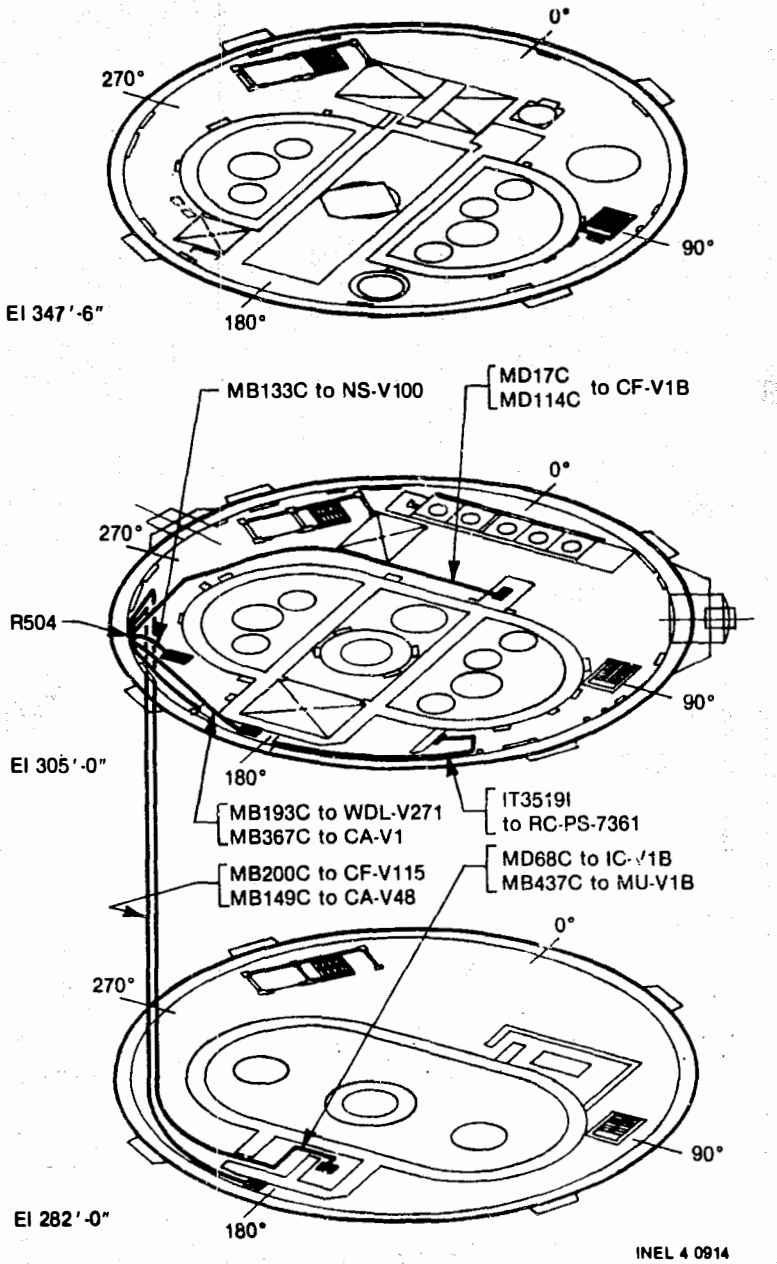

Figure 7. Orientation of penetration R504 in the Reactor Building.

TABLE 3. PRELIMINARY ANALYSIS ANOMALIES FOR PENETRATION R504

Cable/Connection		Anomaly/Conclusion	Value	Limits	Expected[a] Operability
MB133C	TB3/1-2	Low Z_0 (ohms)/Switch in intermediate position	60.8	70.0 to 145	Yes
	TB3/1-2	Long TDR length (ft)	92.8	74.8 to 92.4	
	TB3/1-3	High capacitance (nF)	4.9	1.02 to 3.44	
	TB3/1-3	Low Z_0 (ohms)	58.4	70.0 to 145	
	TB3/1-4	Low Z_0 (ft)	60.2	70.0 to 145	
	TB3/1-4	Long TDR length (ft)	93.3	74.8 to 92.4	
	TB3/1-5	High Capacitance (nF)	3.9	1.02 to 3.44	
	TB3/1-5	Low Z_0 (ohms)	59.4	70.0 to 145	
	TB3/1-5	Long TDR length (ft)	92.8	74.8 to 92.4	
MB149C	TB3/10-11	Low Z_0 (ohms)/Switch in intermediate position	54.4	70.0 to 145	Yes
	TB3/10-12	High capacitance (nF)	5.9	1.28 to 4.30	
	TB3/10-12	Low Z_0 (ohms)/Cross table	55.0	70.0 to 145	
	TB3/10-13	Low Z_0 (ohms)	55.2	70.0 to 145	
	TB3/10-13	High loop resistance (ohms)	1.53	0.190 to 0.297	
	TB3/10-14	High capacitance (nF)	4.9	1.28 to 4.30	
	TB3/10-14	Low Z_0 (ohms)	55.4	70.0 to 145	
MB193C	TB3/19-20	Low Z_0 (ohms)/Switch in intermediate position	55.9	70.0 to 145	Yes
	TB3/19-21	High capacitance (nF)	7.5	1.56 to 5.24	
	TB3/19-21	Low Z_0 (ohms)/Cross table	55.8	70.0 to 145	
	TB3/19-22	Low Z_0 (ohms)	55.7	70.0 to 145	
	TB3/19-23	High capacitance (nF)	6.0	1.56 to 5.24	
MB200C	TB3/28-29	High loop resistance (ohms)/Corroded contacts	35.2	0.268 to 0.418	No
	TB3/28-29	Low Z_0 (ohms)/wet cable	47.6	70.0 to 145	
	TB3/28-29	Long TDR length (ft)	136	105 to 130	
	TB3/28-30	Low Z_0 (ohms)	52.4	70.0 to 145	
	TB3/28-30	Long TDR length (ft)	135	105 to 130	
	TB3/28-31	High capacitance (nF)	10.4	1.44 to 4.85	
	TB3/28-31	Low Z_0 (ohms)	52.6	70.0 to 145	
	TB3/28-31	Long TDR length (ft)	139	105 to 130	

TABLE 3. (continued)

Cable/Connection	Anomaly/Conclusion	Value	Limits	Expected[a] Operability
MB367C TB7/19-20	Low Z_0 (ohms)/Probably wet	54.0	70.0 to 145	Yes
TB7/19-21	High capacitance (nF)	6.9	1.86 to 6.26	
TB7/19-21	Low Z_0 (ohms)	54.3	70.0 to 145	
TB7/19-22	Low Z_0 (ohms)	54.2	70.0 to 145	
TB7/19-23	High capacitance (nF)	6.8	1.86 to 6.26	
TB7/19-23	Low Z_0 (ohms)	54.6	70.0 to 145	
MB437C TB9/24-25	High loop resistance (ohms)/Probably wet	715	.361 to .559	No
TB9/24-25	Low Z_0 (ohms)	53.8	58.7 to 129	
TB9/24-28	Low Z_0 (ohms)	54.7	58.7 to 129	
TB9/24-29	High loop resistance (ohms)	37.4	.361 to 559	
TB9/24-29	Low Z_0 (ohms)	54.7	58.7 to 129	
TB9/24-30	Low Z_0 (ohms)	54.6	58.7 to 129	
TB9/24-32	Low Z_0 (ohms)	45.5	58.7 to 129	
TB9/24-gnd	Low insulation resistance (ohms)	1.92×10^3	10^6	
TB9/34-gnd	Low insulation resistance (ohms)	1.62×10^5	10^6	
MD17C TB4/10-11	High loop resistance (ohms)/Probably wet	.734	.391 to .606	No
TB4/10-12	Low Z_0 (ohms)	54.6	58.7 to 129	
TB4/13-14	High capacitance (nF)	10.7	4.28 to 10.6	
TB4/13-14	Low Z_0 (ohms)	51.5	58.7 to 129	
MD68C TB4/24-29	Low Z_0 (ohms)/Probably wet	53.2	58.7 to 129	Yes
TB4/24-30	High capacitance (nF)	48.2	3.57 to 8.81	
TB4/24-30	Low Z_0 (ohms)	53.1	58.7 to 129	
TB4/24-31	Low Z_0 (ohms)	53.6	58.7 to 129	
TB4/24-32	Low Z_0 (ohms)	53.5	58.7 to 129	
TB4/25-28	High capacitance (nF)	22.3	3.57 to 8.81	
TB4/25-28	Low Z_0 (ohms)	48.7	58.7 to 129	
TB4/24-gnd	Low insulation resistance (ohms)	10^6	10^6	
MD114C TB2/19-20	Low Z_0 (ohms)/Cross table	51.1	70.0 to 145	Yes
TB2/19-21	Low Z_0 (ohms)	51.6	70.0 to 145	
TB2/20-21	Low Z_0 (ohms)	53.2	70.0 to 145	
IT3519C	/Water in conduit			Yes

a. Judgement based on circuit requirements and extent of damage sustained to test date. Functionality status is expected to change as circuits continue to be wet and/or irradiated.

Except for IT3519C and MD114C, each cable was terminated by a multicontact geared limit switch, the position of which was unknown. However, it was presumed that the contacts were either fully open or closed. One switch that was tested in the laboratory had a contact resistance of 0.02 ohms and a capacitance of 2 pF, which was negligible compared to expected cable resistance of about 0.3 ohms and a capacitance of 2 nF.

The insulation resistance was measured between the conductors and signal ground because of the absence of a shield. This was not well defined for these circuits since none of the cables or terminations had ground connections. The lower limit of acceptable insulation resistance used was 10^6 ohms, the same as the power circuits.

Penetration R505: Power Cables

The cables tested in penetration R505 are used for power cables for motor operated valves. The penetration is located at the 319-ft elevation approximately 14 ft above the 305-ft elevation floor and is oriented 247 degrees from the south azimuth. The penetration is a GE Model 238X600MAG and is approximately 7-1/2 ft long.

Of ten cables tested in penetration R505, two exhibited anomalous behavior. One of these circuits (MM131P) was judged inoperable because of an apparent problem with its terminating motor. Additional evaluation would be required to isolate the difficulties. Cable MS88P was analyzed as inoperable because of low insulation resistance. It is postulated this penetration suffered very little damage as a result of the exposure to the accident and postaccident environment.

Figure 8 shows a general location of the penetration and approximate cable routes. Environmental conditions are similar to those described in penetration R504. The end of the cables runs on the 282-ft elevation were submerged for a period of time.

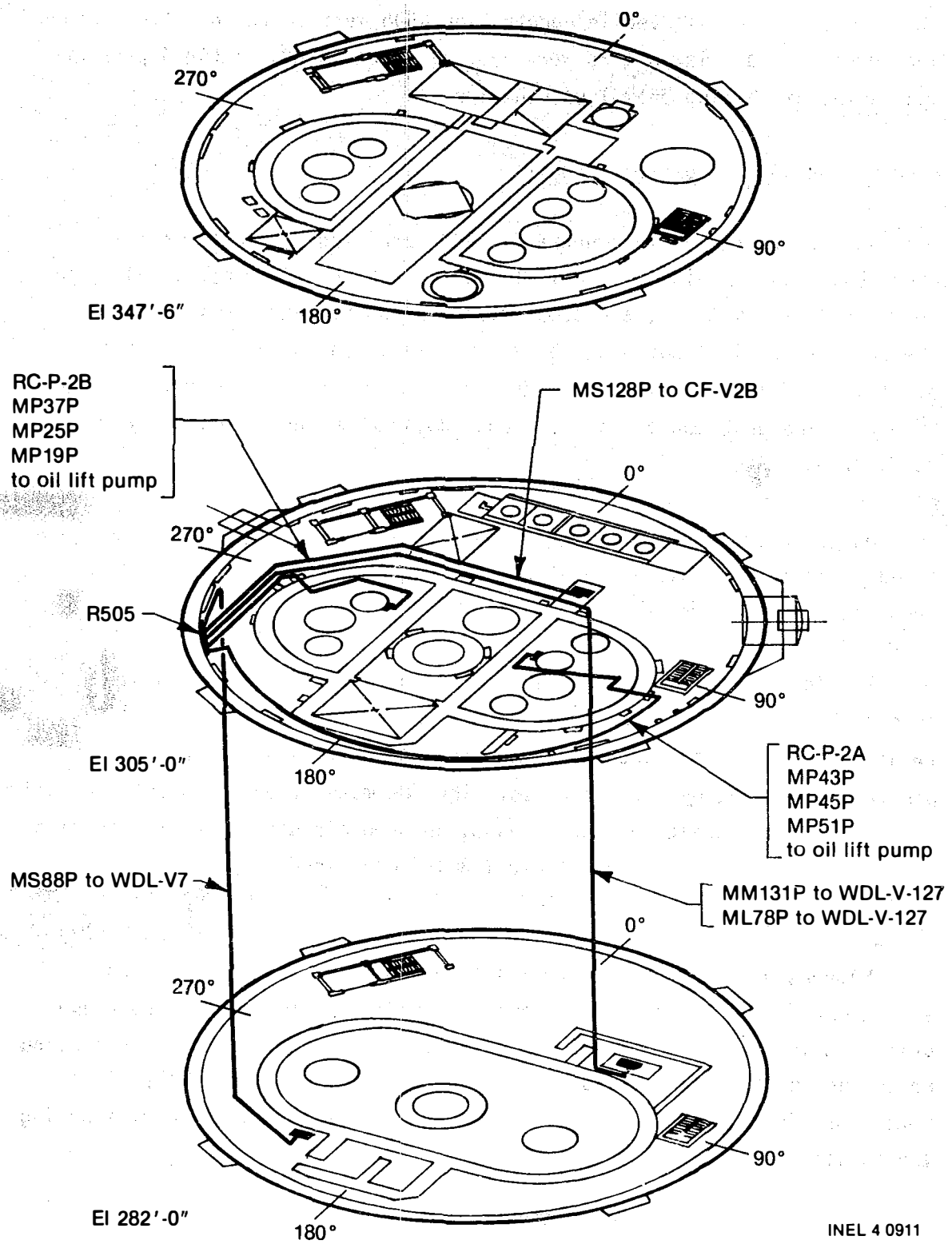

Figure 8. Orientation of penetration R505 in the Reactor Building.

Circuits investigated in penetration R505 were valve operating motors and their cables. The motors were 1/3, 1/2, and 10 HP. Table 4 presents the cables exhibiting anomalous behavior.

Penetration R506: Control Circuits

The cables tested in penetration R506 are used in reactor control circuits. The circuits tested included current transformers, level (pressure) transmitters, and temperature, pressure, and limit switches. The penetration is located at the 323-ft elevation approximately 18 ft above the 305-ft elevation floor and is oriented 254 degrees from the south azimuth. The penetration is a GE Model 238X706MAG and is approximately 11-ft long.

Nineteen cables were tested in penetration R506. Sixteen cables were found to exhibit anomalous behavior; 6 circuits were judged to be inoperable.

The in situ testing of cables in this penetration showed large crosstalk voltages. The channels do not appear to have any unusual failures; however, the crosstalk may indicate corrosion within the penetration caused by water ingress. The TDR measurements suggest that all of the anomalous cables are wet. Also, an open circuit at the termination of IT2750C was identified and cable IT3016C contained a high loop resistance.

Figures 9 and 10 show a general location of the penetration and approximate cable routes. Environmental conditions are similar to those described in penetration R504. In addition, cables on the 305-ft elevation routed behind the air coolers may have been subjected to slightly higher radiation fields. Table 5 lists cables which gave anomalous results during the in situ testing.

TABLE 4. PRELIMINARY ANALYSIS CONCLUSIONS FOR ANOMALOUS CHANNELS IN PENETRATION R505

Cable/Connection	Anomaly/Conclusion	Value	Limits	Expected[a] Operability
MM1 31P TB1/22-23	High loop resistance (ohms) /problem at motor	167.1	39.2 to 47.8	No
TB1/22-24	High loop resistance (ohms) /problem at motor	181.7	39.2 to 47.8	No
MS88P	Low insulation resistance (ohms)	$9.3 10^4$	10^6	No

a. Judgement based on circuit requirements and extent of damage sustained to test date. Functionality status is expected to change as circuits continue to be wet and/or irradiated.

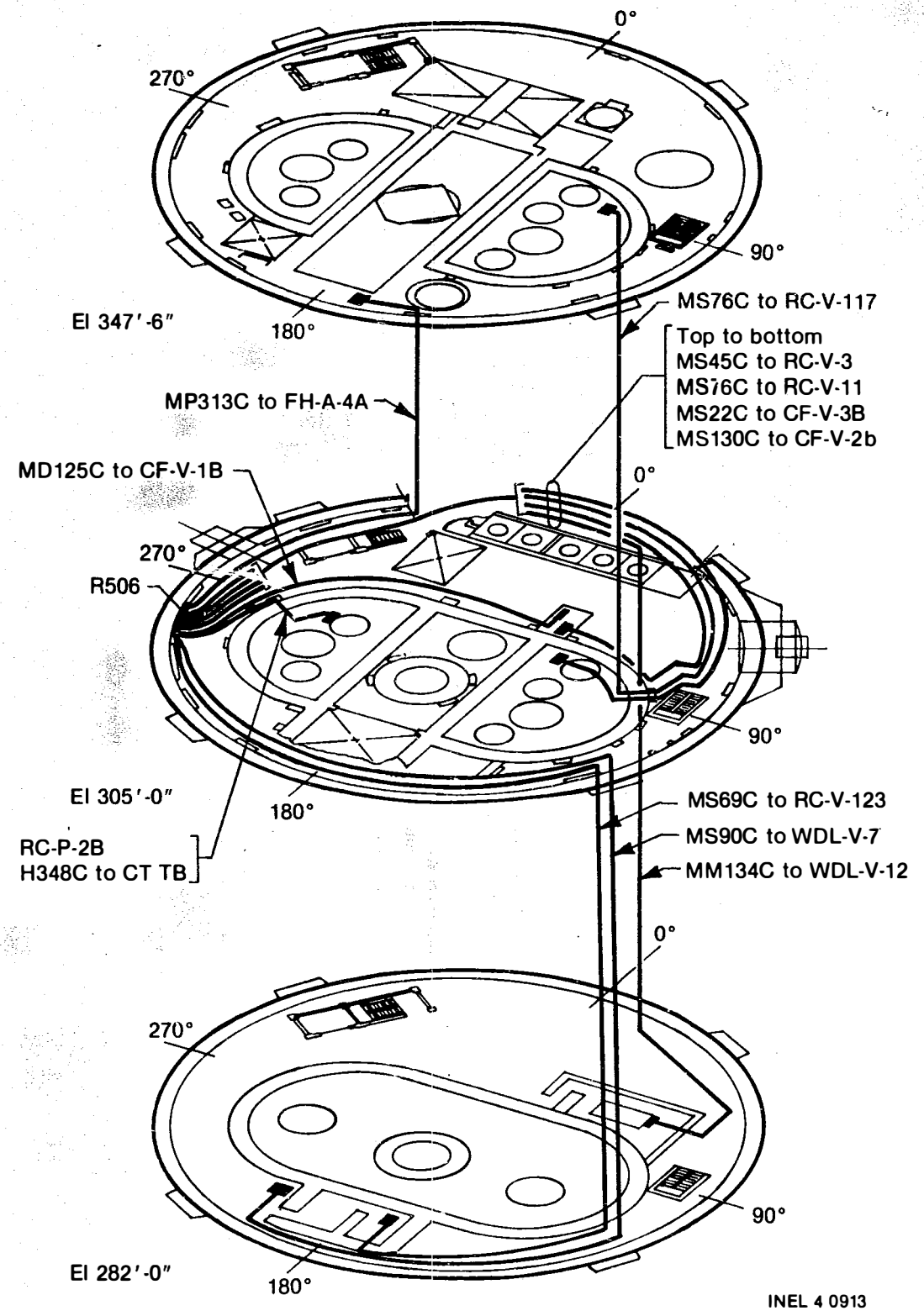

Figure 9. Orientation of penetration R506 and cable runs in the Reactor Building.

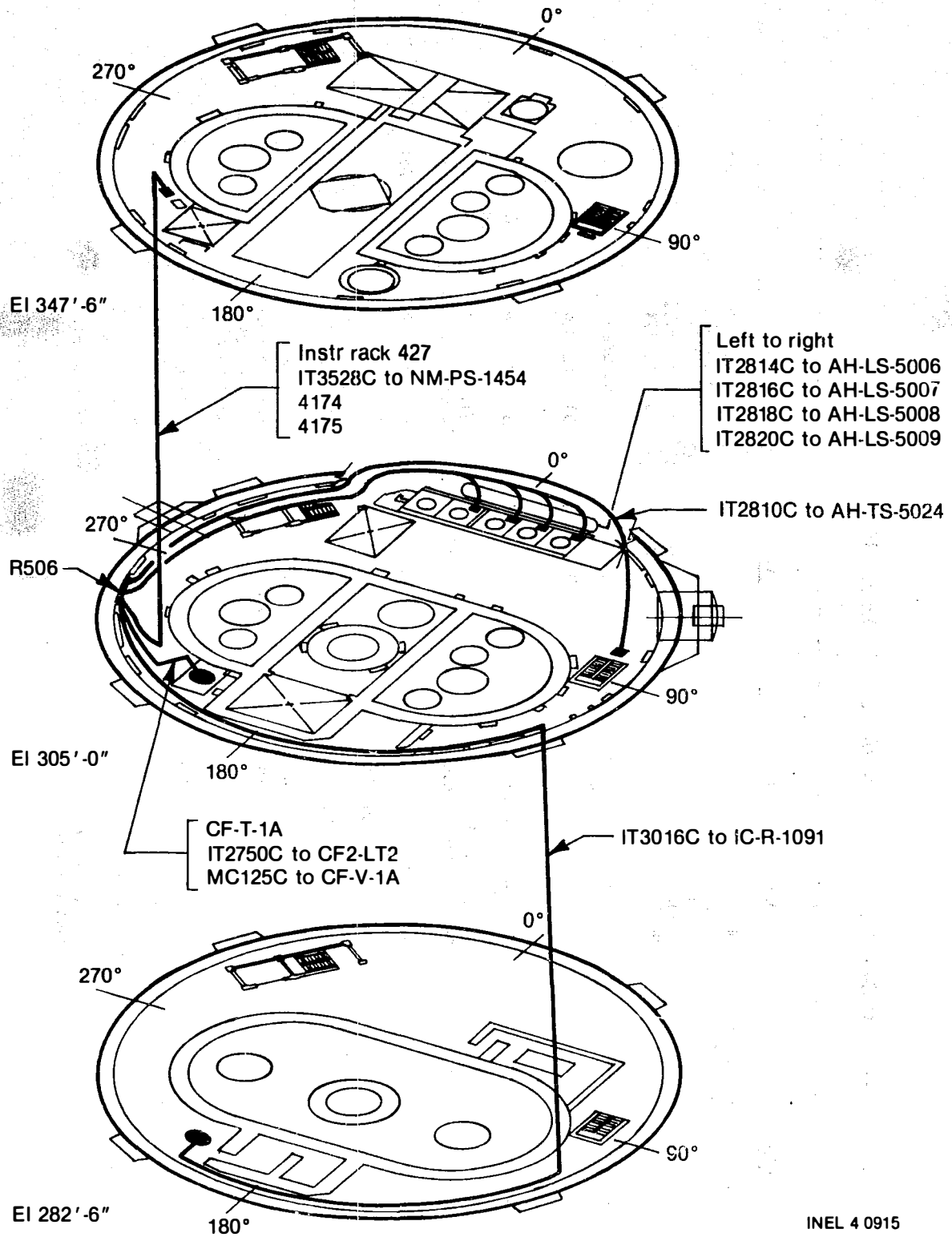

Figure 10. Additional cable runs for penetration R506.

TABLE 5. PRELIMINARY ANALYSIS OF ANOMALIES FOR R506 CIRCUITS

Cable	Connection	Anomaly/Conclusions	Value	Limits	Expected[a] Operability
H348C	TB12/21-23	TDR length short	121.2	141 to 174	Yes
	TB12/22-23	Z_0 low	47.1	49.6 to 82.3	
	TB12/22-23	TDR length short	120.7	141 to 174	
	TB12/23-24	Z_0 low	45.0	49.6 to 82.3	
	TB12/23-24	TDR length short	122.2	141 to 174	
IT2750C	TB1/15-16	Open loop resistance (ohms) /Failed instrument	Open	Not open	No
	TB1/15-16	Low Z_0 (ohms)/probably wet cable	50.6	91.4 to 124	
IT2810C	TB3/11-12	High capitance (nF) probably wet cable	13.6	5.76 to 8.93	
	TB3/11-12	Low Z_0 (ohms)	51.1	91.4 to 124	
	TB3/11-12	Low loop resistance (ohms)	0.521	0.525 to 0.770	
IT2814C	TB3/15-16	Low Z_0 (ohms)	48.6	91.4 to 124	Yes
	TB3/19-20	Low Z_0 (ohms)	48.3	91.4 to 124	
	TB3/19-20	Long TDR length (ft)	262.5	194 to 239	
	TB3/21-22	Low Z_0 (ohms)	50.6	91.4 to 124	
	TB3/21-22	Long TDR length (ft)	249.2	187 to 231	
IT3016C	TB7/1-2	High loop resistance	988	0.983 to 1.44	No
	TB7/1-2	High capacitance (nF)	2830	8.33 to 13.9	
	TB7/1-2	Low Z_0 (ohms)	57.0	59.8 to 81.0	
	TB7/1-3	Low Z_0 (ohms)	56.7	59.8 to 81.0	
	TB7/2-3	High loop resistance (ohms)	1190	0.983 to 1.44	
	TB7/2-3	High capacitance (nF)	2820	8.33 to 13.9	
	TB7/2-3	Low Z_0 (ohms)	52.2	59.8 to 81.0	
	TB7/4-5	High capacitance (nF)	13.7	8.33 to 13.9	
	TB7/4-5	Low Z_0 (ohms)	51.5	59.8 to 81.0	
	TB7/6-7	Low Z_0 (ohms)	53.1	59.8 to 81.0	
	TB7/10-11	Low Z_0 (ohms) /Possibly wet	52.7	59.8 to 81.0	

TABLE 5. (continued)

Cable	Connection	Anomaly/Conclusions	Value	Limits	Expected[a] Operability
IT3528C	TB13/10-11	Low loop resitance (ohms)	0.238	0.263 to 0.385	Yes
	TB13/10-11	Low Z_0 (ohms)/noise and crosstalk	65.1	78.6 to 132	
	TB13/10-11	Long TDR length (ft)	111.9	85.0 to 105	
	TB13/10-12	Low Z_0 (ohms)	65.3	78.6 to 132	
	TB13/10-12	Long TDR length (ft)	113.0	85.0 to 105	
	TB13/11-12	Low Z_0 (ohms)	58.0	78.6 to 132	
	TB13/11-12	Long TDR length (ft)	100.1	85.0 to 105	
MC125C	T82/1-2	High capacitance (nF)	9.31	4.32 to 6.54	yes
	T82/1-2	Low Z_0 (ohms)	51.7	91.4 to 124	
MM134C	T82/1-2	Low Z_0 (ohms)/limit switch failed contacts	55.0	70.0 to 145	No
	T82/1-2	Long TDR length (ft)	364	274 to 338	
	T82/1-2	High capacitance (nF)	23.2	3.75 to 12.6	
	T82/1-3	Low Z_0 (ohms)	57.4	70.0 to 145	
	T82/1-3	Long TDR length (ft)	366	274 to 338	
MM134C	T82/1-4	Low Z_0 (ohms)	55.4	70.0 to 145	yes
	T82/1-4	Long TDR length (ft)	363	274 to 338	
	T82/1-5	High capacitance (nF)	20.2	3.74 to 12.6	
	T82/1-5	Low Z_0 (ohms)	59.8	70.0 to 145	
	T82/1-5	Long TDR length (ft)	370	274 to 338	
MP313C	T84/10-11	Low Z_0 (ohms)/noise and crosstalk	48.9	61.9 to 83.7	Yes
	T84/10-11	Long TDR length (ft)	211.3	162 to 200	
	T84/12-13	Low Z_0 (ohms)	61.0	61.9 to 83.7	
	T84/13-15	Long TDR length (ft)	212.3	162 to 200	
	T84/14-15	Low Z_0 (ohms)	51.5	61.9 to 83.7	
	T84/14-15	Long TDR length (ft)	200.5	162 to 200	
	T84/16-19	Low Z_0 (ohms)	50.9	61.9 to 83.7	
	T84/16-19	Long TDR length (ft)	207.4	162 to 200	
	T84/20-21	Low Z_0 (ohms)	51.9	61.9 to 83.7	
	T84/20-21	Long TDR length (ft)	201.5	162 to 200	
	T84/22-23	Low Z_0 (ohms)	53.5	61.9 to 83.7	

TABLE 5. (continued)

Cable	Connection	Anomaly/Conclusions	Value	Limits	Expected[a] Operability
MS22C	TB6/10-11	Low Z_0 (ohms)	53.3	70.0 to 145	Yes
	TB6/10-12	Low Z_0 (ohms)	54.9	70.0 to 145	
	TB6/10-13	Low Z_0 (ohms)	54.8	70.0 to 145	
	TB6/10-14	Low Z_0 (ohms)	56.7	70.0 to 145	
MS45C	TB6/19-20	Low Z_0 (ohms)/noise and crosstalk	54.6	70.0 to 145	No
	TB6/19-20	Long TDR length (ft)	380	301 to 372	
	TB6/19-21	High capacitance (nF)	21.8	4.12 to 13.9	
	TB6/19-21	Low Z_0 (ohms)	59.6	70.0 to 145	
	TB6/19-21	Long TDR length (ft)	388	301 to 372	
	TB6/12-22	Low Z_0 (ohms)	54.1	70.0 to 145	
	TB6/19-22	Long TDR length (ft)	380	301 to 372	
	TB6/19-23	High capacitance (nF)	17.2	4.12 to 13.9	
	TB6/19-22	Low Z_0 (ohms)	56.8	70.0 to 145	
	TB6/19-22	Long TDR length (ft)	384	301 to 372	
MS69C	TB8/30-31	Low Z_0 (ohms)	55.7	70.0 to 145	Yes
	TB6/30-31	Long TDR length (ft)	422	313 to 386	
	TB8/30-32	Low Z_0 (ohms)	69.9	70.0 to 145	
	TB6/30-32	Long TDR length (ft)	426	313 to 386	
	TB6/30-32	Long TDR length (ft)	427	313 to 386	
	TB8/30-34	Low Z_0 (ohms)	66.3	70.0 to 145	
MS76C	TBB/21-22	Low Z_0 (ohms)/limit switch in intermediate position	54.7	70.0 to 145	Yes
	TB8/21-22	Long TDR length (ft)	386	306 to 378	
	TB8/21-23	High Capacitance (nF)	21.2	4.19 to 14.1	
	TB8/21-23	Low Z_0 (ohms)	67.8	70.0 to 145	
	TB8/21-23	Long TDR length (ft)	380	306 to 378	
	TB8/21-25	High Capacitance (nF)	16.7	4.19 to 14.1	
	TB8/21-25	Low Z_0 (ohms)	68.6	70.0 to 145	

TABLE 5. (continued)

Cable	Connection	Anomaly/Conclusions	Value	Limits	Expected[a] Operability
MS90C	TB6/28-29	Low Z_0 (ohms)/corroded contacts	56.8	70.0 to 145	No
	TB6/28-29	Long TDR length (ft)/limit switch in intermediate position	445	325 to 401	
	TB6/28-30	Low Z_0 (ohms)	55.0	70.0 to 145	
	TB6/28-30	Long TDR length (ft)	460	325 to 401	
	TB6/28-31	Low Z_0 (ohms)	54.4	70.0 to 145	
	TB6/28-31	Long TDR Length (ft)	444	325 to 401	
	TB6/28-31	High Loop Resistance (ohms)	1.57	.83 to 1.29	
	TB6/28-32	Low Z_0 (ohms)	54.1	70.0 to 145	
	TB6/28-32	Long TDR Length (ft)	445	325 to 401	
	TB6/28-Gnd	Low Insulation resistance (ohms)	1.7 x 10		
MS130C	TB6/1-2	Low Z_0 (ohms)/corroded contacts	54.0	70.0 to 145	No
	TB6/1-2	Long TDR Length (ft)	368	301 to 372	
	TB6/1-3	Low Z_0 (ohms)/contacts indicating wrong position	64.9	70.0 to 145	
	TB6/1-4	Low Z_0 (ohms)	69.3	70.0 to 145	
	TB6/1-5	High Capacitance (nF)	15.8	4.12 to 13.9	
	TB6/1-5	Low Z_0 (ohms)	66.3	70.0 to 145	

a. Judgement based on circuit requirements and extent of damage sustained to test date. Functionality status may change as circuits continue to be wet and/or irradiated.

Penetration R534: Plant Instrumentation

The cables tested in penetration R534 are used for reactor plant instrumentation circuits. The penetration is located 5-ft below the ceiling of the 305-ft elevation and is oriented at approximately 197 degrees from the south azimuth. The penetration is a GE Model 238X702MAG1 and is 11-1/2 ft long.

Of 14 cables tested in penetration R534, anomalies were observed in seven. Table 6 lists those circuits with anomalous results. Five of these circuits were judged to be inoperable.

Crosstalk voltages were observed indicating possible penetration corrosion. However, the environmentally sealed splices appear to be surviving well.

The transmitters for circuits IT2368C and IT2370I appear failed and should be removed and tested as well as the cables. Circuit IT2370I has a low Z_0 and should be checked for moisture.

Figure 11 shows the general location of the penetration and appropriate cable routes. Environmental conditions are similar to those described in penetration R504.

Penetration R607: Reactor Instrumentation

The cables in penetration R607 are reactor instrumentation circuits. This penetration is located at the 292-ft elevation approximately 9.5 ft above the basement floor and is oriented at approximately 287 degrees from the south azimuth. The penetration is a GE Model 238X600MAG1 and is 11-1/2 ft long.

This penetration and associated circuits/cables experienced the most severe environmental conditions of the circuits that were in situ tested. A total of 52 cables were tested in penetration R607; 47 exhibited anomalous behavior, and 33 contained circuits evaluated as being inoperable.

TABLE 6. PRELIMINARY ANALYSIS ANOMALIES FOR CIRCUITS IN PENETRATION R534

Cable/Connection	Anomaly/Conclusion	Value	Limits	Expected[a] Operability
IT2360C Conn. A	Low capacitance (nF)	0.2	3.3	No
Conn. A	High Z_0 (ohms)	245.	61.8 to 83.6	
	High resistance connection at penetration			
IT2366I TB2/2-3	Loop resistance open /open at termination	Open	Not open	No
IT2368C TB8/1-3	Low Z_0 (ohms)	59.9	91.4 to 124	No
TB8/1-3	Low loop resistance (ohms)	24.9	100 (estimated)	
	High capacitance (nF) /Failed instrument /Possible wet cable	200,000	2.77 to 4.06 (cable only)	
IT2370C TB4/2-3	Low Z_0 (ohms)	47.8	52.8 to 90.5	No
TB4/2-3	Low loop resistance (ohms)	162.1	100 (estimated)	
	High capacitance (nF) /Failed instrument	8608	3.61 to 5.29 (cable only)	
IT2472I TB5/2-3	TDR length short (ft)	151.4	157 to 194	Yes
IT4079C TB9/1-3	Loop resistance open (ohms)	Open	Not open	No
TB9/1-3	Low Z_0 (ohms) /Open at termination	60.2	91.4 to 124	
IT4080I TB1/1-2	TDR length short (ft)	115.6	128 to 158	Yes

a. Judgement based on circuit requirements and extent of damage sustained to test date. Functionality status may change as circuits continue to be wet and/or irradiated.

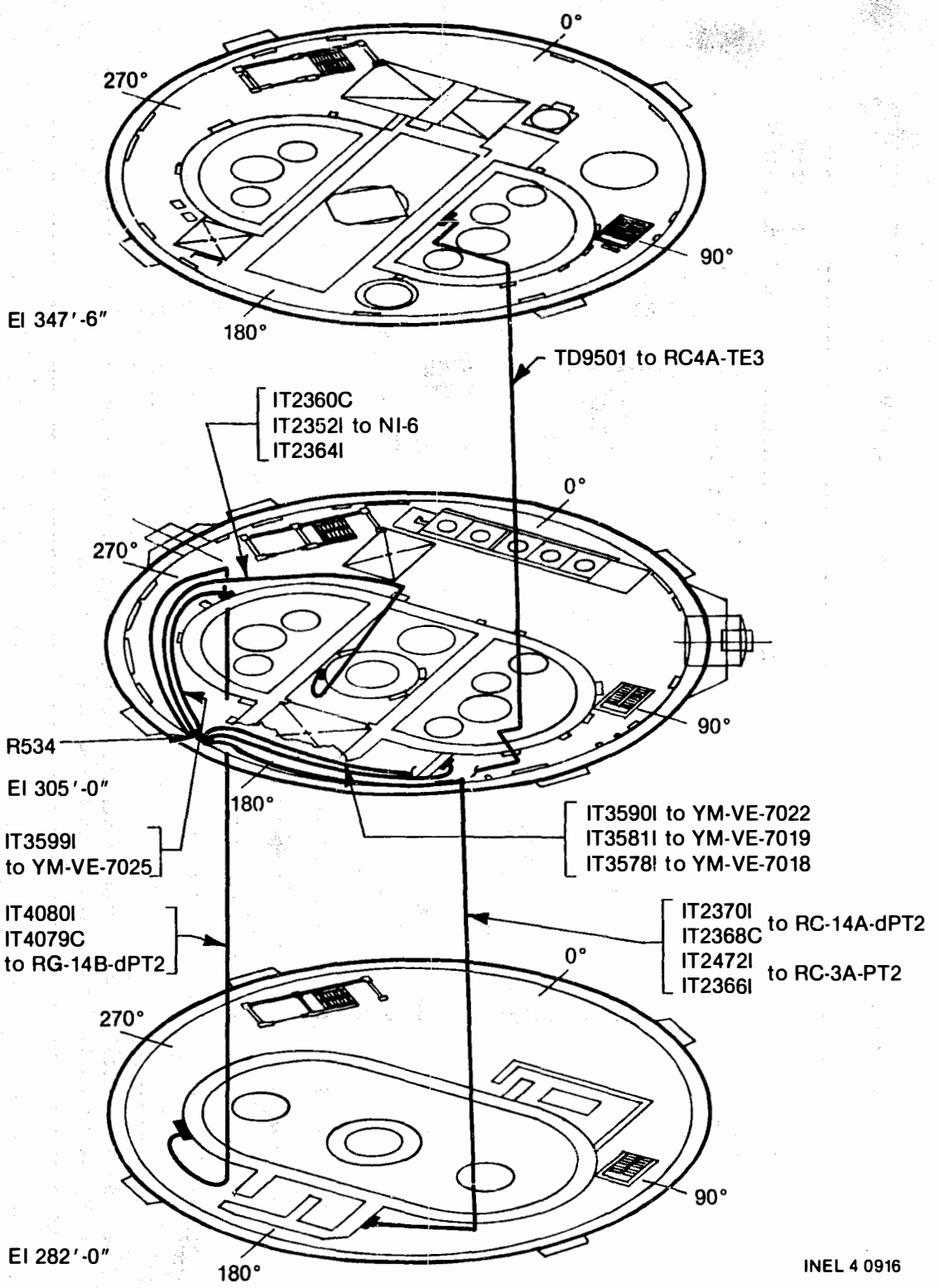

Figure 11. Orientation of penetration R534 in the Reactor Building.

Many of the anomalies observed in these penetration circuits are characteristic of water damage. Records from the 1979 accident indicated that the water level in the Reactor Building basement reached a peak elevation of 292 ft and probably, partially submerged the inner penetration box. Crosstalk was observed which may be the result of water within the penetration. Indications of several broken wires and corroded contacts were found.

Figures 12 through 15 show the general location of the penetration and cable routes. These cable routes were subjected to a broad range of environmental conditions. The centerline of this penetration is located at the basement high water point; consequently, at least the lower half of the inner liner terminal was submerged for a considerable period of time. Many of the cable runs and end instruments were also submerged. Other portions of the cable runs were subjected to the steam and water discharge path from the Reactor Coolant System. In addition, some cable may have been subjected to the flame propagation path during the hydrogen burn event. Table 7 presents the cable circuits found to exhibit anomalous behavior.

Laboratory Results from Polar Crane Cable

The following is a brief summary of laboratory data obtained from the polar crane cable. This was the first cable to be removed and evaluated by laboratory testing. The sequencing of laboratory hot cell tests is not complete. These data are presented for illustrative purposes.

The polar crane pendant cable is a control cable used to manipulate the 500 ton Reactor Building polar crane at TMI-2. During the LOCA, 50 ft of cable hung suspended at nearly the center of the Reactor Building with the remainder coiled flat on the floor; thus, the cable is considered a prime source for studying both radiation levels and hydrogen burn patterns.

No in situ data was obtained other than visual inspection. The cable was removed as part of the polar crane refurbishment, and with orientations carefully marked, was cut into 30 in. sections. The measured radiation

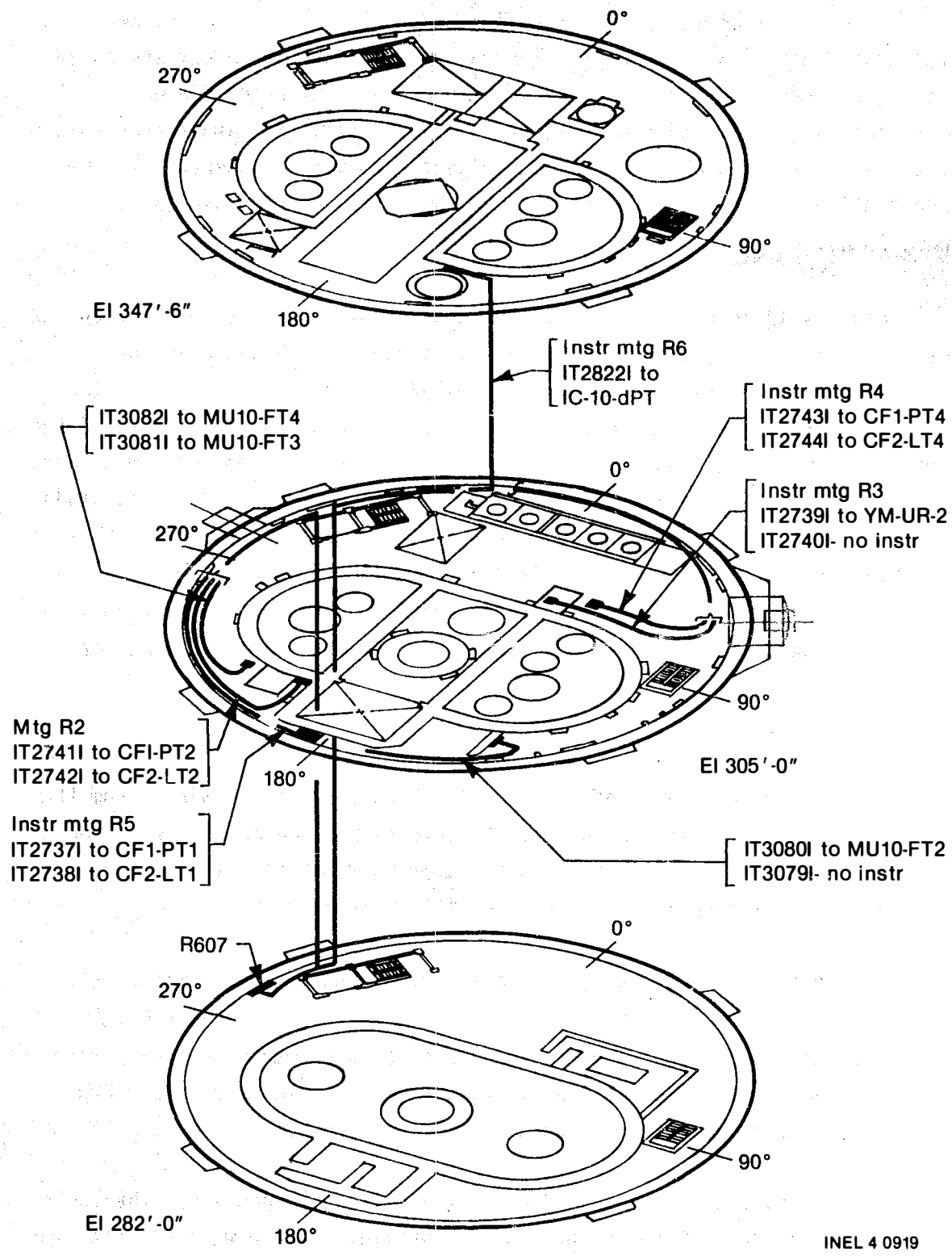

Figure 12. Orientation of penetration R607 and cable runs in the Reactor Building (sheet 1).

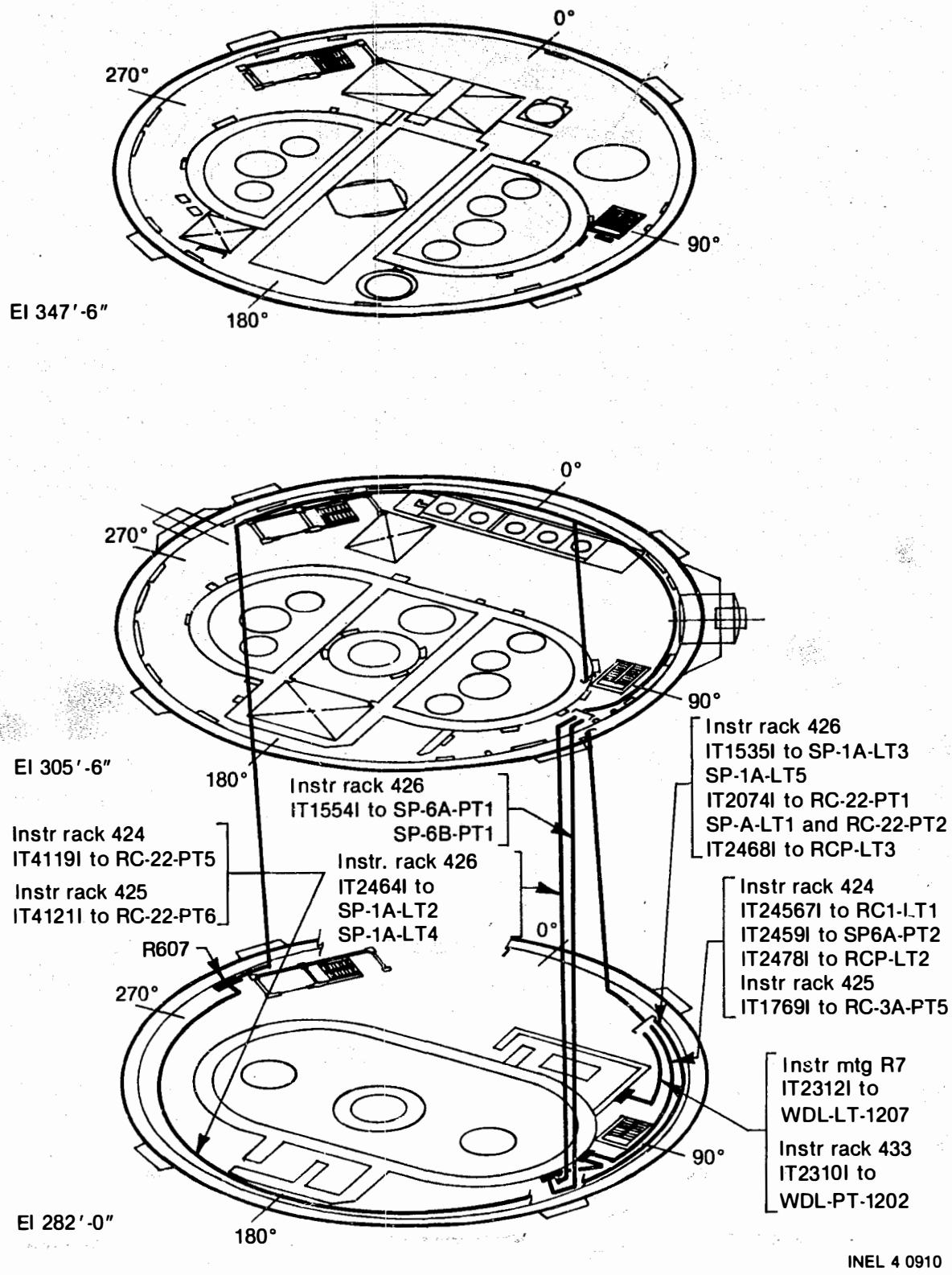

Figure 13. Orientation of penetration R607 and cable runs in the Reactor Building (sheet 2).

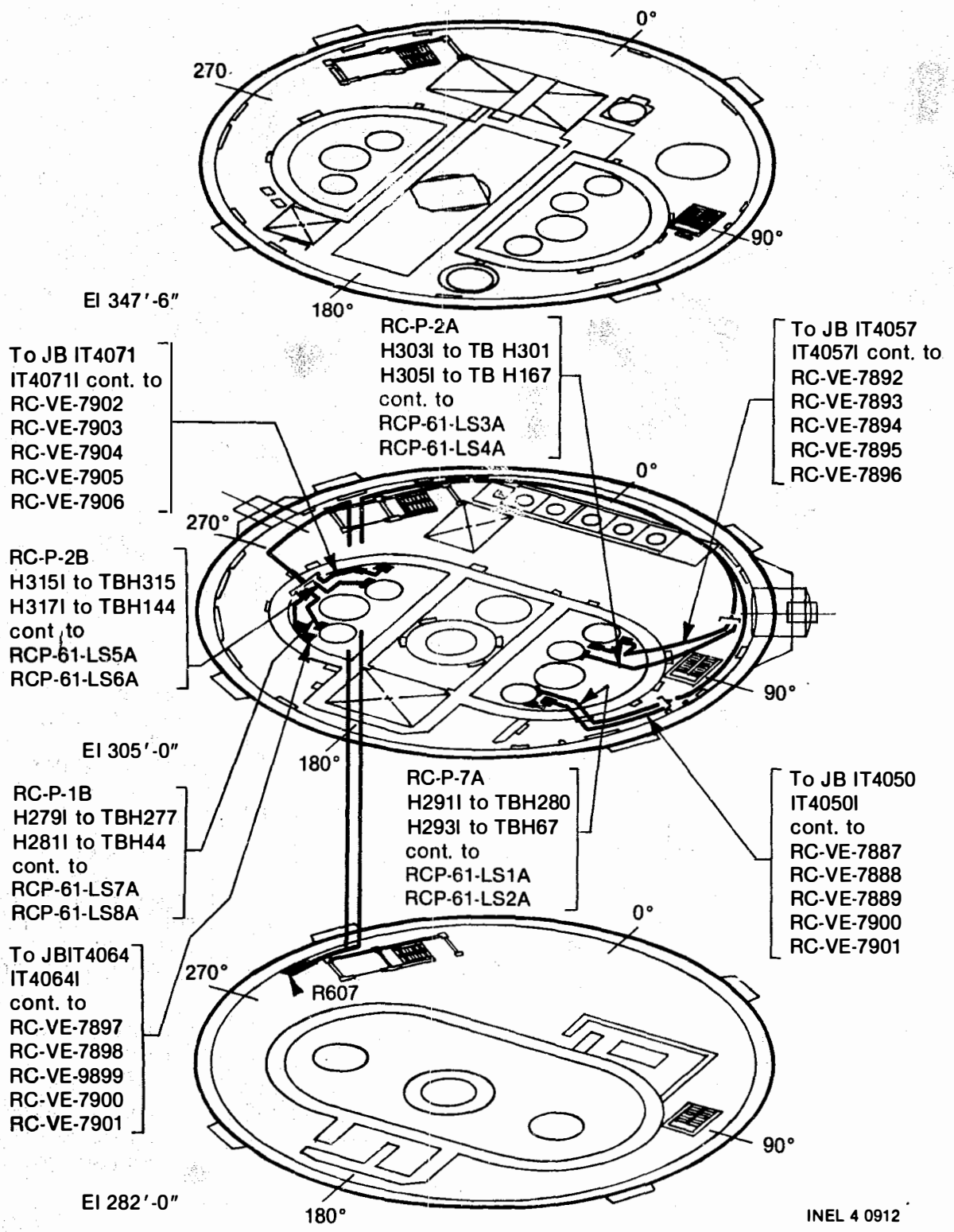

Figure 14. Orientation of penetration R607 and cable runs in the Reactor Building (sheet 3).

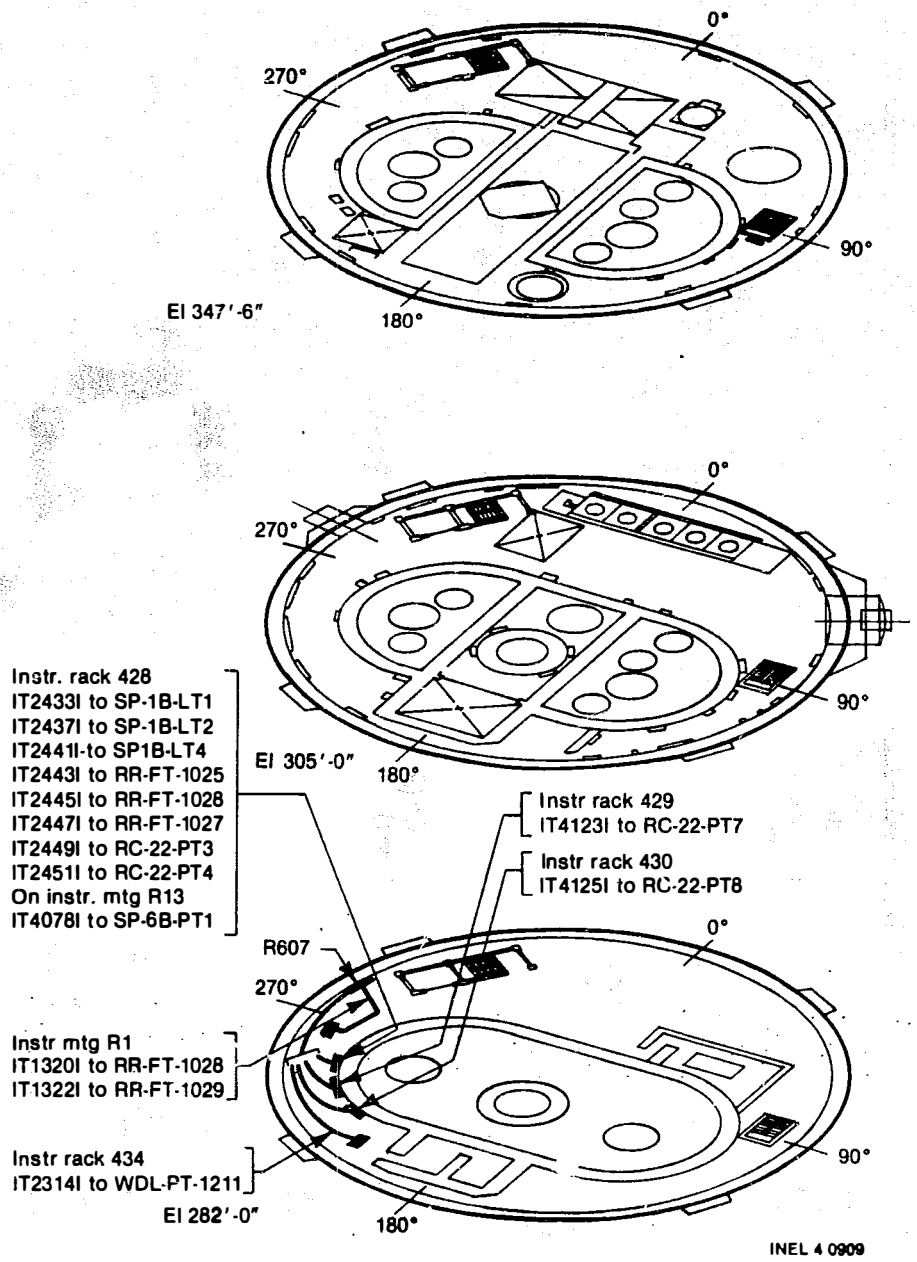

Figure 15. Orientation of penetration R607 and cable runs in the Reactor Building (sheet 4).

TABLE 7. PRELIMINARY ANALYSIS ANOMALIES FOR CIRCUITS IN PENETRATION R607

Cable/Connection	Anomaly/Conclusion	Value	Limits	Expected[a] Operability
Level and Flow Switch Circuits				
H2911 J2/A-E	Low capacitance (nF)/End Instrument Contacts Corroded	5.77	10.4 to 14.8	No
J2/A-E	Low insulation resistance (ohms)	10^7	10^7	
H303I J3/B-C	Low loop resistance (ohms)/probably wet cable	2.9×10^6	Open	Yes
J3/B-C	Low insulation resistance (ohms)	10^7	10^7	
H315I J4/A-3	Low loop resistance (ohms)/corroded contacts	6.6×10^7	Open	No
J4/A-3	Low insulation resistance (ohms)	10^7	10^7	
J4/A-3	High capacitance (nF)	10.0	6.63 to 9.21	
Foxboro Pressure Transmitter Circuits				
IT1769I J9/R-Z	Open loop resistance (ohms) /Open near termination or bad transmitter	Open	Not open	No
IT2074I J6/G-A	Low insulation resistance (ohms) /instrument appears failed	7.5×10^6	10^7	No
IT2310I J9/K-R	Low Z_0 (ohms)	52	52.8 to 90.5	No
J9/K-R	Short TDR length (ft)	266	275 to 340	
J9/K-R	Open loop resistance (ohms) /Open near termination or bad transmitter	Open	Not open	
IT2314I J7/G-A	Short TDR length (ft)	111.3	136 to 168	Yes
J7/G-A	Low insulation resistance (ohms)	5.8×10^5	10^7	
IT2443I J8/A-E	Open loop resistance (ohms) /Open near termination or bad transmitter	Open	Not open	No

TABLE 7. (continued)

Cable/Connection	Anomaly/Conclusion	Value	Limits	Expected[a] Operability
Level and Flow Switch Circuits				
IT2445I J8/D-J	Low insulation resistance (ohms)	2.5×10^5	10^7	Yes
J8/D-J	Short TOR length (ft)/probable wet cable	66	69.7 to 86.1	
IT2445I J8/D-J	Open loop resistance (ohms) /Open near termination or bad transmitter	Open	Not open	No
IT2449I J8/G-A	Short TOR length (ft)	65.7	69.7 to 86.1	No
J8/G-A	Low insulation resistance (ohms)	1.5×10^4	10^7	
IT2459I J5/P-N	Low insulation resistance (ohms)	10^6	10^6	No
IT4119I J8/K-R	Short TDR length (ft)	253.5	354 to 437	No
J8/K-R	Low insulation resistance (ohms)	3.8×10^5	10^7	
J8/K-R	Open loop resistance (ohms)	Open	Not open	
J8/K-R	/Open at about 154 ft.			
IT4121I J8/L-M	Low insulation resistance (ohms)	3.3×10^3	10^7	No
J8/L-M	Short TOR length (ft)	256	292 to 361	
J8/L-M	Open loop resistance (ohms)	Open	Not open	
J8/L-M	/Open at about 256 ft.			
IT4123I J8/N-P	Short TDR length (ft)	73.3	133 to 164	No
J8/N-P	Open loop resistance (ohms) /Open at about 73 ft.	Open	Not open	
IT4125I J8/O-D	Low insulation resistance (ohms)	1.4×10^5	10^7	No
J8/O-D	Low capacitance (nF)	2.85	3.81 to 5.85[b]	
J8/O-D	Short TDR length (ft)	98	155 to 191	
J8/O-D	Open loop resistance (ohms) /Open at about 98 ft.	Open	Not open	

TABLE 7. (continued)

Cable/Connection	Anomaly/Conclusion	Value	Limits	Expected[a] Operability
"Static-O-Ring" Circuits				
H293I/H294C J2/P-N	Low capacitance (nF)	3.95	7.86 to 13.5	No
J2/P-N	High loop resistance (ohms) /Possibly bad switch	63.7	2.46 to 3.64	
H317I/H318C J4/P-N	High loop resistance (ohms) /Possibly bad switch	108	1.38 to 2.04	No
Bailey Level Transmitter Circuits				
IT1535I J5/B-C	Low insulation resistance (ohms)	2.7 to 10^6	10^7	No
J5/A-E	Open loop resistance (ohms) /Open at termination or bad transmitter	Open	Not open	
IT2433I J6/B-C	Low insulation resistance (ohms) /apparent instrument failure	6×10^5	10^7	No
IT2437I J6/R-Z	Short TDR length (ft)/Instrument damage	47.2	69.7 to 86.1	No
J6/R-Z	Low insulation resistance (ohms)/probable wet cable	5×10^5	10^7	
IT2441I J6/K-R	Short TDR length (ft)/Failed instrument	63.8	69.7 to 86.1	No
J6/K-R	Low insulation resistance (ohms)/probable wet cable	4.2×10^5	10^7	
IT2447I	Capacitance low			No
IT2451I	High capacitance/wet cable			No
IT2457I J8/R-Z	Low insulation resistance (ohms) /apparent failed instrument	10^6	10^7	No
IT2464I	Instrument failed			No

TABLE 7. (continued)

Cable/Connection	Anomaly/Conclusion	Value	Limits	Expected[a] Operability
IT2468I J6/S-K	Low insulation resistance (ohms)	9×10^5	10^7	No
J6/S-K	Low loop resistance (ohms) /Near short at termination	14.5	100 (estimated)	
IT2478I	/apparent instrument failure			No
Warrick Relay Circuits				
H281I/H284C J7/P-N	High capacitance (nF)	14.3	6.74 to 10.7	Yes
H293I/H296C J2/S-K	High capacitance (nF)	18.2	9.23 to 15.1	Yes
H317I/H320C J4/S-K	High capacitance (nF)	18.4	6.62 to 15.5	Yes
Brooks Flow Transmitter Circuits				
IT3079I J11/H-J	Open loop resistance (ohms) Open at termination/Instrument appears failed	Open	10^4	No
IT3081I J11/AA-GG	Open loop resistance (ohms) Open at termination/Instrument contacts corroded	Open	10^4	No
IT3082I J11/K-S	Open loop resistance (ohms) Open at termination/Instrument contacts corroded	Open	10^4	No
Miscellaneous Transmitter Circuits				
IT1320I J1/A-E	Short TDR length (ft)/probably wet cable	39.3	51.0 x 63.0	Yes
IT1322I J11/B-C	Short TDR length (ft)/probably wet cable	40.3	51.0 x 63.0	Yes
J11/B-C	Low insulation resistance (ohms)	2.7×10^6	10^7	
IT2312I J9/P-N	Low Z_0 (ohms)/probably wet cable	51	52.8 x 90.5	Yes
J9/P-N	Short TDR length (ft)	275	301 to 372	

TABLE 7. (continued)

Cable/Connection	Anomaly/Conclusion	Value	Limits	Expected[a] Operability
IT2737I J7/F-M	Short TDR length (ft)	247	258 to 319	No
J7/F-M	Low loop resistance (ohms) /Short at termination	1.89	1.96 to 2.89[a]	
IT2740I	/wet cable			Yes
IT2738I J7/K-R	Low Z_0 (ohms)	50	52.8 x 90.5	No
IT2638I J7/K-R	Short TDR length (ft)	229	258 to 319	Yes
IT2741I J7/A-E	Low Z_0 (ohms)	50	52.8 x 90.5	Yes
IT2742I J7/B-C	Low Z_0 (ohms)	46.6	52.8 x 90.5	No
J7/B-C	Short TDR length (ft)	232	238 to 294	
J7/B-C	Open loop resistance (ohms) Open at termination or bad transmitter	Open	Not open	
IT2743I J7/R-Z	Low Z_0 (ohms)	50	52.8 x 90.5	Yes
IT2744I J7/O-J	Short TDR length (ft)	244	262 to 323	No
J7/D-J	High Z_0 (ohms) /High resistance connection at penetration	125	52.8 to 90.5	
IT4078I J9/B-C	Low insulation resistance (ohms)	1.6×10^6	10^7	Yes
J9/B-C	Short TDR length (ft)	77.5	109 to 134	
TD657I J23/p-h	Short TDR length (ft)	0	102 to 126	No
J23/p-h	Open loop resistance (ohms)	Open	113 to 166	

a. Judgement based on circuit requirements and extent of damage sustained to test date. Functionality status is expected to change as circuits continue to be wet and/or irradiated.

b. Cable only.

levels emitted from the cable are shown in Figure 16. The relatively high radiation levels for lower section numbers are attributed to these cable sections lying flat in the Reactor Building, exposing more surface area to settling contamination (increasing section number corresponds to increasing height).

A visual examination of the cable sections allowed the mapping of the hydrogen burn effects on the cable sheath, with greater damage occurring at higher elevations; individual conductor insulation appeared unaffected.

Tensile test results from conductor insulation are presented in Figure 17. Elongation results were essentially unchanged over the length of the cable, and the trend of decreasing tensile strength with increasing section number does not follow the radiation pattern; the reduction in tensile strength is more likely due to heat from the hydrogen burn.

No significant difference in electrical properties has been observed between the different cable sections and control cable.

Test procedures for evaluating the electrical and mechanical properties of cables removed from the TMI-2 Reactor Building continue to be established. Since these tests are to be performed on components that are radioactively contaminated, hot cell facilities are required.

The specific objectives of the laboratory tests are to establish the condition of the components removed from the Reactor Building for comparison with control specimens and circuit requirements. Procedures are being established to characterize cable dielectric constant and functional parameters, which include characterization of insulation resistance, capacitance, dissipation, and voltage breakdown properties. Procedures and apparatus to evaluate the cable component performance under the environmental stresses of moisture, radiation, and temperature are also being established.

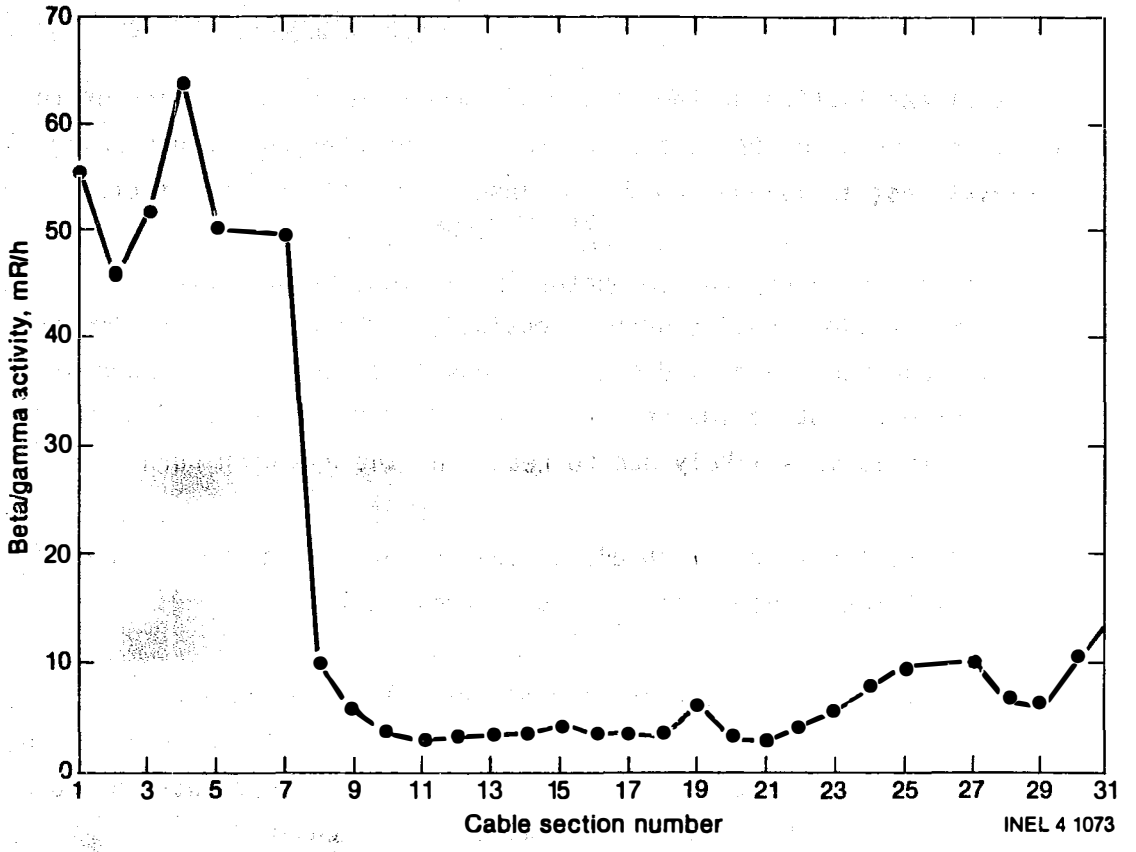

Figure 16. Radiation level as a function of polar crane cable section number.

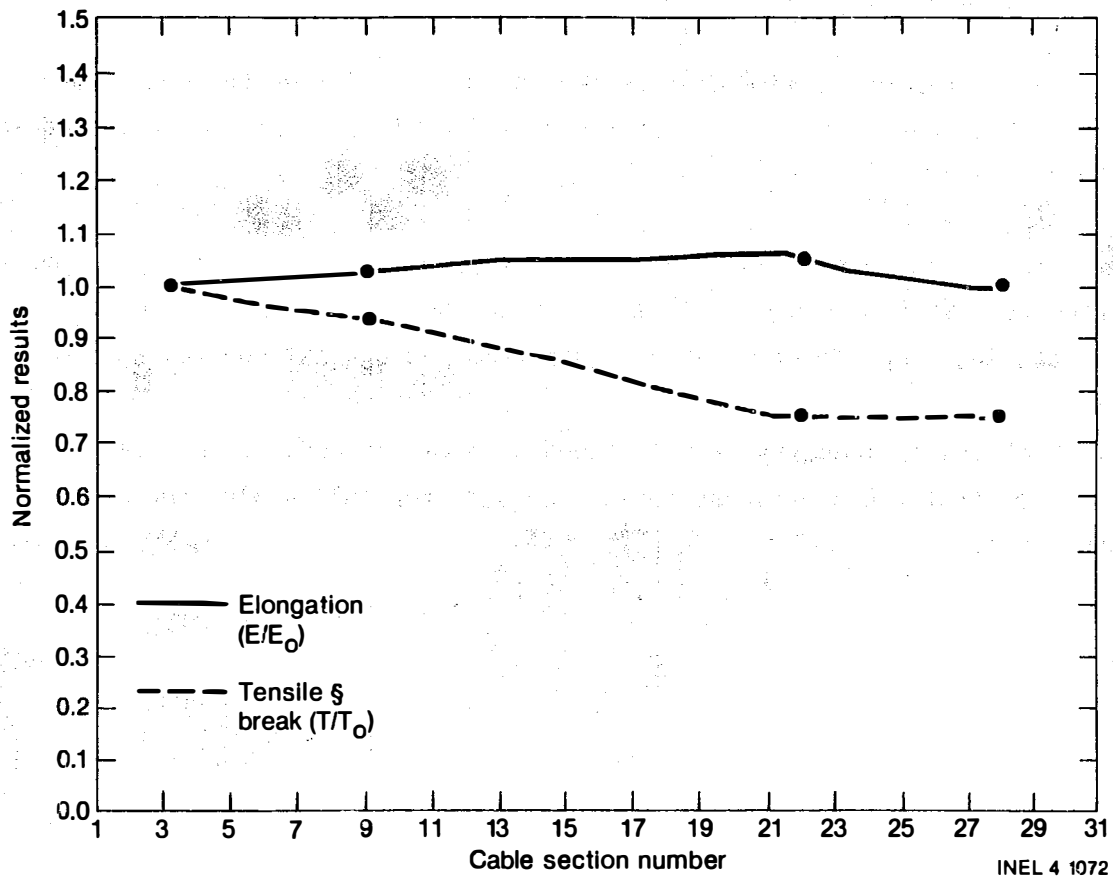

Figure 17. Tensile properties as a function of polar crane cable section number.

The test facilities and necessary apparatus for cable evaluation tests are approximately 70% completed. Duplicate facilities have been set up in both a hot cell facility and a laboratory. This allows comparative evaluation of components removed from the TMI-2 Reactor Building and control samples.

Cable components have been tested in both facilities to demonstrate that results correlate, i.e., samples give identical results when tested in either facility.

Testing is complete on cable sections removed from the hydrogen burn environment of the Reactor Building. Those cable sections show no evidence of electrical impairment, when data are compared against control specimens.

Contacts in industry have reviewed the test procedures and have concurred that the procedures appear adequate for full evaluation of components.

CONCLUSIONS

A total of 155 TMI-2 Reactor Building cables have been tested in situ; anomalous electrical behavior was observed in 100 (65%) of these cables. Of these, 59 cables (38%) contained circuits classified as inoperable.

Table 8 summaries the number of inoperable cables, by penetration, and also includes some general environmental conditions. Penetration R405 had the highest rate of damaged cables; however, there were only five cables tested in this penetration. This penetration was probably partially covered with water and is in a high radiation area.

Understanding of environmental effects on cable damage is expected to be enhanced by laboratory study of cables removed from the Reactor Building. The laboratory tests will allow a separation of cable damage from penetration/end instrument effects. Table 9 presents a list of cables recommended for removal for laboratory study based on these preliminary in situ results. Also recommended are channels for further in situ testing.

Five cables extending from the 305 to the 347-ft elevations (MP313C, MS76C, IT3528C, TD9501, and IT2822I) should have received the most exposure to the hydrogen burn. All five cables were judged to be in operable condition; this conclusion combined with the polar crane results suggests that the hydrogen burn did not substantially damage cables in the TMI-2 Reactor Building, particularly those of the type tested.

TABLE 8. PENETRATION ENVIRONMENT AND DAMAGE SUMMARY

Penetration Section	Penetration Elevation (ft)	Irradiation (R/h)	Cable References to Water			Inoperable (%)
			Number of Cables	Cables Marginal[a]	Cables Below[b] Water	
R400, R402, R407	292	20 to 50	39	39	0	12.8
R405	292	50 to 1000	5	4	1	80.0
R406	292	20 to 50	6	4	2	16.7
R504	323	20	10	4	0	30.0
R505	319	20	10	3	0	20.0
R506	323	20	19	4	0	31.6
R534	300	20	14	6	0	35.7
R607	292	20 to 50	52	38	14	63.5

a. Cables which were partially above and below water level.

b. Peak water level 292-ft elevation.

TABLE 9. CABLES RECOMMENDED FOR LABORATORY ANALYSIS

Cable	Conclusion	Recommendation
R400, R502, R407		
S078P	Low insulation resistance	Test insulation resistance of separate cable sections
S0168P	Open heater circuit	Test components to isolate open
SP31P	Possibly wet cable	Retest, remove cable, and check for moisture
SP150P	Possibly wet cable	Retest, remove cable, and check for moisture
SP152P	Possibly wet cable	Retest, remove cable, and check for moisture
R405		
H337C	Open circuit at penetration	Check connections at penetration
H359C	Open circuit at penetration	Check connections at penetration
R406		
IT3566I	High connection resistance	Check penetration connections
TD592I	Open at penetration	Check connections. Verify RTD installed
IT3519C	Possibly wet	Retest, remove cable, and check for moisture
MB133C	Possibly wet	Retest, remove cable, and check for moisture
MB149C TB3/10-13	Bad contacts	Check switch contacts
MB149C	Possibly wet	Retest, remove cable, and check for moisture
MB193C	Possibly wet	Retest, remove cable, and check for moisture
MB200C TB3/28-29	Bad contacts	Check switch contacts

TABLE 9. (continued)

Cable	Conclusion	Recommendation
MB200C	Possibly wet	Retest, remove cable, and check for moisture
MB367C	Possibly wet	Retest, remove cable, and check for moisture
MB437C TB9/24-25	Bad contacts	Check switch contacts
MB437C TB9/24-29	Bad contacts	Check switch contacts
MB437C	Possibly wet	Retest, remove cable, and check for moisture
MD17C	Possibly wet	Retest, remove cable, and check for moisture
MD68C	Possibly wet	Retest, remove cable, and check for moisture
MD114C	Possibly wet	Retest, remove cable, and check for moisture
R505[a]		
MM131P	High resistance at motor	Check motor and connections
R506		
IT2750C	Failed instrument or open connection	Check instrument and connections
H348C	Possibly wet	Retest, remove cable, and check for moisture
IT2810C	Possibly wet	Retest, remove cable, and check for moisture
IT2814C	Possibly wet	Retest, remove cable, and check for moisture
IT2816C	Possibly wet	Retest, remove cable, and check for moisture
IT2818C	Possibly wet	Retest, remove cable, and check for moisture
IT3016C	Possibly wet	Retest, remove cable, and check for moisture

TABLE 9. (continued)

Cable	Conclusion	Recommendation
IT3528C	Possibly wet	Retest, remove cable, and check for moisture
MC125C	Possibly wet	Retest, remove cable, and check for moisture
MM134CMP313C	Possibly wet	Retest, remove cable, and check for moisture
MS22C	Possibly wet	Retest, remove cable, and check for moisture
MS45C	Possibly wet	Retest, remove cable, and check for moisture
MS69C	Possibly wet	Retest, remove cable, and check for moisture
MS76C	Possibly wet	Retest, remove cable, and check for moisture
MS90C	Possibly wet	Retest, remove cable, and check for moisture
MS130C	Possibly wet	Retest, remove cable, and check for moisture
R534		
IT2360C	High resistance connection	Check connection, remove and test transmitter
IT2366C	Open termination	Check connection, remove and test transmitter
IT2368C	Failed instrument (low resistance)	Remove and test transmitter
IT2370C	Failed instrument (low resistance) and possible wet cable	Remove and test transmitter. Retest, remove cable and check for moisture.
R607		
H293I/H294C	Possibly bad switch	Check switch and connections
H317I/H318C	Possibly bad switch	Check switch and connections

TABLE 9. (continued)

Cable	Conclusion	Recommendation
IT1535I	Open at termination or failed transmitter	Check connections, remove and test transmitter
IT1769I	Open near termination or failed transmitter	Check connections, remove and test transmitter
IT2310I	Open near termination or failed transmitter	Check connections, remove and test transmitter
IT2443I	Open near termination or failed transmitter	Check connections, remove and test transmitter
IT2449I	Open near termination or failed transmitter	Check connections, remove and test transmitter
IT2468I	Low resistance at termination	Check connections, remove and test transmitter
R607		
IT2744I	High resistance connection at penetration	Check connections at penetration
IT3082I	Open at transmitter	Check connections, remove and test transmitter
IT4119I	Open at about 254 ft.	Check cable connections, remove and test transmitter
IT4121I	Open at about 256 ft.	Check cable connections, remove and test transmitter
IT4123I	Open at about 73 ft.	Check cable connections, remove and test transmitter
IT4125I	Open at about 98 ft.	Check cable connections, remove and test transmitter
TD657I	Open at penetration	Check connections at penetration
H315I	Wet approximately first 25% of cable	Remove section at start of cable and check for moisture
H317I	Wet approximately first 25% of cable	Remove section at start of cable and check for moisture
IT1554I	Wet approximately first 25% of cable	Remove section at start of cable and check for moisture

TABLE 9. (continued)

Cable	Conclusion	Recommendation
IT1554I	Wet approximately first 25% of cable	Remove section at start of cable and check for moisture
IT2310I	Wet approximately first 25% of cable	Remove section at start of cable and check for moisture
IT2312I	Wet approximately first 25% of cable	Remove section at start of cable and check for moisture
IT2822I	Wet approximately first 25% of cable	Remove section at start of cable and check for moisture
IT3079I	Wet approximately first 25% of cable	Remove section at start of cable and check for moisture
IT3080I	Wet approximately first 25% of cable	Remove section at start of cable and check for moisture
IT3081I	Wet approximately first 25% of cable	Remove section at start of cable and check for moisture
IT3082I	Wet approximately first 25% of cable	Remove section at start of cable and check for moisture
IT4121I	Wet approximately first 25% of cable	Remove section at start of cable and check for moisture

a. All cables look about the same and have lower Z_0 than control cable so all are OK or are all wet. To determine which, test more control cables or remove one of the in situ cables and retest.

APPENDIX A
IN SITU TEST EQUIPMENT

IN SITU TEST EQUIPMENT

A list of equipment used for in situ testing of the TMI-2 Reactor Building circuits is given in Table A-1. A flow chart of the data acquisition system is given in Figure A-1.

The electrical parameters measured were

- Initial Voltage Characterization
- Time Domain Reflectometry Signature
- Capacitance
- Inductance
- Direct Current Loop Resistance
- Insulation Resistance.

As shown in Figure A-1, all of these electrical parameters were entered directly into an HP85 digital computer at the time of measurement, except for the insulation resistance measurement.

TABLE A-1. IN SITU TEST EQUIPMENT

Manufacturer	Model #	Function
Tektronix	7854	Storage Oscilloscope
Tektronix	7A26	Plug-in Type Trace Amplifier
Tektronix	554	Plug-in Type Pulse Generator
Tektronix	S5	Plug-in Type Sampling Head
Tektronix	7S12	Plug-in Type TDR Sampler Unit
Tektronix	7B85	Plug-in Type Delay Time Base
Hewlett Packard	HP3465B	Digital Multimeter
Hewlett Packard	HP3456A	dc Offset Resistance Meter
Hewlett Packard	HP4192A	Impedance Analyzer LCR Meter
Hewlett Packard	HP4329A	High Resistance Meter
Hewlett Packard	HP85	Personal Computer
Hewlett Packard	HP7225A	Plotter
Hewlett Packard	HP82902M	Flexible Disc Drive

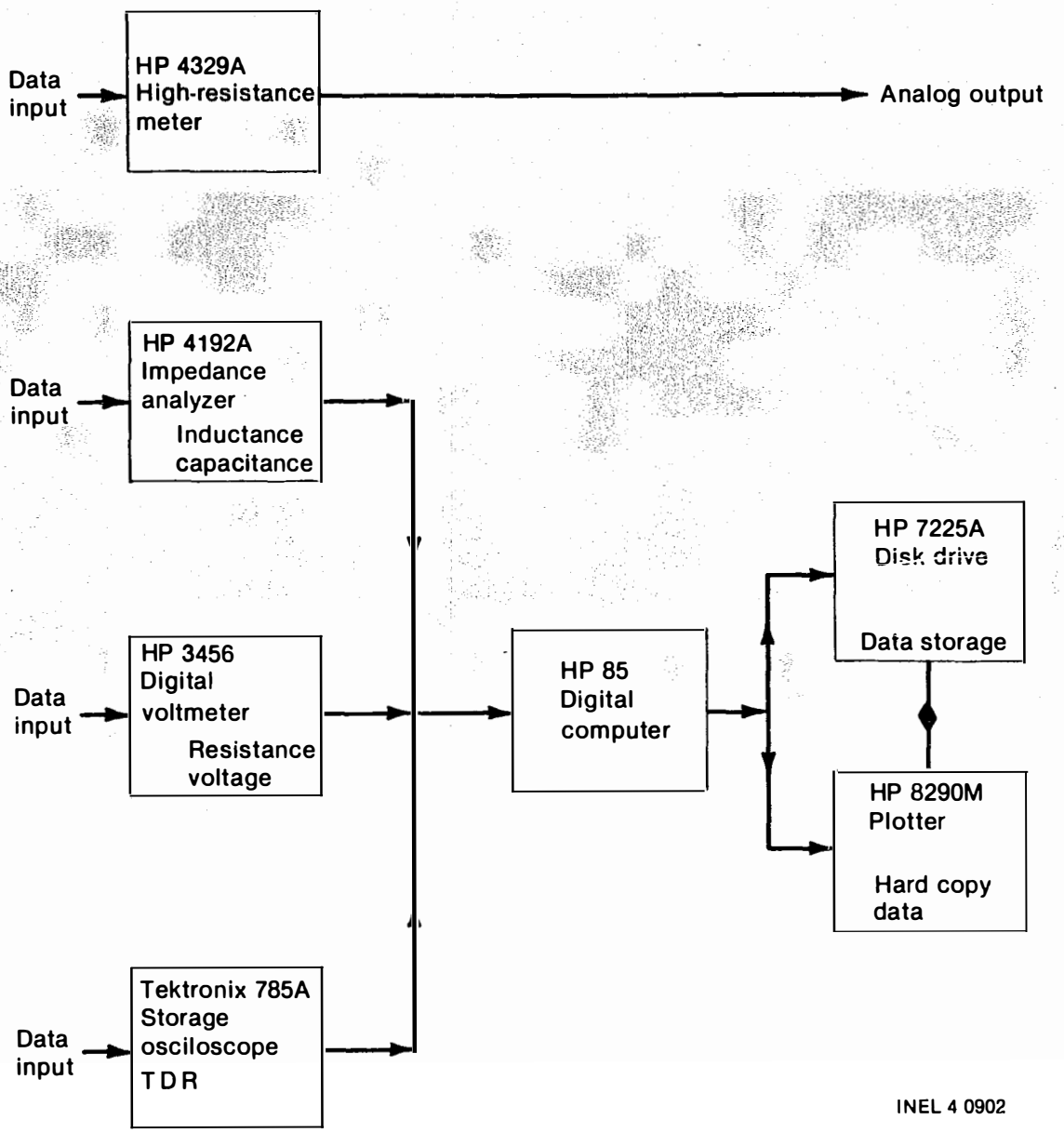

Figure A-1. Flow chart of in situ Data Acquisition System.

APPENDIX B
METHODOLOGY FOR DATA ANALYSIS

METHODOLOGY FOR DATA ANALYSIS

PRELIMINARY DATA ANALYSIS PROGRAM

Software was developed for the Hewlett-Packard 85 computer to perform a preliminary on-site evaluation of the cable/connection data. Figure B-1 shows a sample of the final data report generated by this computer program for a representative set of test data. The headings at the top of Figure B-1 contain identifying information. Specifically included are the cable identification number, instrument tag number, cable type, instrument elevation, the penetration and terminal identification, and the date the circuit was tested.

Data in the "control cable" column was obtained by performing on-site tests of unused cable samples of the same vintage and reel number as the cable undergoing the test. Test samples of these cables were obtained and archived at TMI. The laboratory test on these test samples were performed using the same test methods and equipment used in the in situ test. The resulting data serve as a basis for predicting expected in situ test results. In the column labeled "Predicted," the data was obtained by combining the control cable data with an estimate of the length of the cable undergoing the in situ test. The estimated length was obtained from plant records of cable pull lengths. If the cable to be tested is connected to an instrument, estimates were made to include that instrument's resistance, inductance, and capacitance. This value was added to the predicted cable contribution to produce the final predicted values. The end instrument's contribution was obtained by analyzing its electronic circuit diagram and is shown in the Instrument Adds (Instr. Adds) list on each data table. The test engineer uses the "Control Cable," "Predicted," and "Instru. Adds" columns as a guideline during in situ testing as a quick qualification of the data at the test site. In the column labeled "Test Leads," the data provided are specific to the test leads, connected to cables/channels under test.

Cable # H279I Type FR-15VVV Penetration and Terminals R607/J1/D-J

Instrument TAG # RCP60-LS7 Elevation 305'0" Date 08/26/83

Parameters	Control Cable	Penetration	Test Leads	Insitu Test	Predicted
Loop Resistance	.505 ohms	.0908 ohms	.411 ohms	Open ohms	Open ohms
Total Inductance	13.2 microH	3.0412 microH	3.45 microH	Open micro	Open microH
Total Capacitance	1.83 nf	.089 nf	.594 nf	7.187 nf	7.979256 nf
Insul. Resistance	.8E12 ohms	ohms	.65E11 ohms	3.45E8ohms	10E9 ohms
Dissip. Fact.	Out of Range	--	--	.015	Out of Range
Prop. Delay	1.775 ns/ft	1.5883 ns/ft	1.4845 ns/ft	890.6 ns/ft	1.775 ns/ft
Z1 = [SQR(L/C]	60.055 ohms	184.85 ohms	ohms	NA ohms	60.055 ohms
Z2 = 50(1+P/1-P)	73.426 ohms	ohms	ohms	76.278 ohms	73.426 ohms
Ave.L/ft.	.22	.22667	--	--	.22
Ave.C/ft.	.030083	.0066334	--	--	.030083
Ave.Res/ft.	.0085139	.0067675	--	--	.0085139
TDR Length	60 ft	13.417 ft	--	222.14 ft	232 ft
Ind Length	60 ft	13.417 ft	--	NA ft	NA ft
Cap. Length	59.988 ft	13.417 ft	--	220.92 ft	232 ft
Res. Length	59.992 ft	13.417/ft	--	NA ft	NA ft
1/V = [C/(SQR K)]	1.7602E-9	--	--	--	Instr. Adds;
Random Noise	0 volts	.21527 volts	--	.185 volts	0 ohms
Penetration and Insitu Test Data have test lead data subtracted				--	0 microH
Predicted R, L and C include Instr. Contribution				--	1 nf

Figure B-1. In situ test data sheet for unimpaired channel D-J.

In order to evaluate the cable inside the Reactor Building, the measured value of penetration wires must be subtracted from the total measured value. Thus, the "Penetration" column contains a characterization value specific to the penetration wires.

The in situ test column contains measured values from which penetration and test lead values were subtracted. Data in this column, when compared with the predictions in the adjacent column, provide a characterization of the present status of the cable/channel under test. Also in the "In Situ Test" column, the cable length based on TDR, Resistance, Capacitance, and Inductance is shown. These lengths are based on the control cable characterization data and are arrived at by subtracting the end instrumentation's contribution to the in situ test data. The length of the cable under test will also be calculated from the TDR data using the control cable as a basis for calculation. The impedence of the cable under test will also be calculated from the TDR and compared to the impedance of the control cable.

The computer generated data tables provide a basis for preliminary field analysis of the condition of the cable/channel. The following discussion will demonstrate how the data taken at TMI-2 is used to arrive at field analysis conclusions.

Examples of Good Cable/Channel

Figure B-1 shows a good cable/channel data set. Cable H279I is connected to instrument RCP60-LS7 through pins D and J in penetration 607. This instrument is a normally open limit switch and is indicative of an open circuit. A cable connected to a normally open set of contacts should yield the following information:

- Electrical length based on TDR
- Electrical length based on capacitance from TDR

- Cable impedance from TDR
- Capacitance
- Dissipation factor
- Insulation resistance
- Induced voltage (noise) on channel.

As can be seen in Figure B-1, the TDR length and length based on capacitance compare very closely and the cable impedance is within predicted values. A low dissipation factor and good insulation resistance readings are also within acceptable limits. These factors indicate that the cable/channel is in good condition.

Cable H279I is connected to Instrument RCP56-PS16 through pins A and E in penetration 607. This instrument is a normally closed pressure switch and is indicative of a short circuit. A cable connected to a normally closed contact should yield the following information:

- Electrical length based on TDR
- Cable impedance from TDR
- Electrical length based on inductance
- Electrical length based on resistance.

As can be seen in Figure B-2, TDR length and length based on inductance compare very closely and the cable impedance is within predicted value. The dc loop resistance measurement also compares closely with TDR and inductance length. These factors indicate that the cable/channel is in good condition.

The difference between the recorded lengths of cable of pins A-E versus pins D-J is most likely a result of the varying length of the electrical hook up wire from the terminal box to the end relays.

Cable # H279I Type FR-I5VVV Penetration and Terminals R607/J1/A-E

Instrument TAG # RCP56-PS16 Elevation 305'0" Date 08/25/83

Parameters	Control Cable	Penetration	Test Leads	Insitu Test	Predicted
Loop Resistance	.505 ohms	.0908 ohms	.411 ohms	2.052 ohms	1.9752 ohms
Total Inductance	13.2 microH	3.0412 microH	3.45 microH	50.809micro	51.04 microH
Total Capacitance	1.83 nf	.089 nf	.594 nf	Shorted	Shorted
Insul. Resistance	.8E12 ohms	ohms	.65E11 ohms	3.45E8ohms	10E9 ohms
Dissip. Fact.	Out of Range	--	--	Out of Range	Out of Range
Prop. Delay	1.775 ns/ft	1.5883 ns/ft	1.4845 ns/ft	917.9 ns/ft	1.775 ns/ft
Z1 = [SQR(L/C]	60.055 ohms	184.85 ohms	ohms	NA ohms	60.055 ohms
Z2 = 50(1+P/1-P)	73.426 ohms	ohms	ohms	75.865 ohms	73.426 ohms
Ave.L/ft.	.22	.22667	--	--	.22
Ave.C/ft.	.030083	.0066334	--	--	.030083
Ave.Res/ft.	.0085139	.0067675	--	--	.0085139
TDR Length	60 ft	13.417 ft	--	229.83 ft	232 ft
Ind Length	60 ft	13.417 ft	--	229.82 ft	232 ft
Cap. Length	59.988 ft	13.417 ft	--	NA ft	NA ft
Res. Length	59.992 ft	13.417/ft	--	229.26 ft	232 ft
1/V = [C/(SQR K)]	1.7602E-9	--	--	--	Instr. Adds;
Random Noise	0 volts	.21527 volts	--	0 volts	0 ohms
Penetration and In Situ Test Data have test lead data subtracted					0 microH
Predicted R, L and C include Instr. Contribution				--	0 nf

Figure B-2. In situ test data sheet for unimpaired channel A-E.

Examples of a Good Cable With a Bad End Instrument -- Bad Channel

Three channels (wire pairs) in cable IT264I were tested. Two of the channels are connected to an end instrument and the third channel is a spare.

Bailey level transmitters SP-1A-LT2 and SP-1A-LT4 are connected to cable IT2464I through pins D-J and f-m respectively and the spare is connected to pins L-M in penetration R607. Instrument channel data in Figures B-3 and B-4 show the resistance values are much lower than predicted and the capacitance value is much higher than predicted. The length and impedances calculated from the TDR for these channels are within acceptable limits. The spare channel data are shown in Figure B-5.

The capacitance, dissipation factor, and the TDR measurements for this channel are within acceptable limits. Also, the TDR length, length based on capacitance, the dissipation factor, and the impedance calculated from the TDR for the spare channel indicate a good cable. Data in Figure B-6, clearly show that the cables are in good condition and that there is an anomaly in instrument SP-1A-LT4.

Examples of Wet Cable

Foxboro Pressure Transmitter WDL-PT-1207 is connected to cable IT2312I through pins p-n in penetration R607. Figure B-7 shows the first set of data taken on 08/29/83. These data indicate a higher than predicted capacitance, a higher than expected dissipation factor, and a less than expected TDR length. The TDR plot on 08/29/83 indicates that approximately the first 50 ft of cable, beginning at the inner liner of the penetration box, has a lower than expected impedance. This fact, when considered with the higher than predicted capacitance, indicates that this 50-ft section of the cable is wet. A second set of data was taken on 04/04/84 and is shown in Figure B-8. A comparison of this data with that taken on 08/29/83 show that the capacitance decreased and the impedance in the first 50-ft of

Cable # IT2464I Type FR-15WW Penetration and Terminals R607/J6/D-J

Instrument TAG # SP-1A-LT2 Elevation 282'6" Date 09/14/83

Parameters	Control Cable	Penetration	Test Leads	Insitu Test	Predicted
Loop Resistance	.505 ohms	.0908 ohms	.411 ohms	2500 ohms	Open ohms
Total Inductance	13 microH	3.0412 microH	3.45 microH	Open microH	Open microH
Total Capacitance	1.59 nf	.089 nf	.594 nf	36.517 nf	16.8236 nf
Insul. Resistance	1.75E11 ohms	ohms	.65E11 ohms	3.5E7 ohms	10E9 ohms
Dissip. Fact.	Out of Range	--	--	Out of Range	Out of Range
Prop. Delay	1.6242 ns/ft	1.5883 ns/ft	1.4845 ns/ft	1291.63 ns/ft	1.6242 ns/ft
Z1 = [SQR(L/C]	63.938 ohms	184.85 ohms	ohms	NA ohms	63.938 ohms
Z2 = 50(1+P/1-P)	66.279 ohms	ohms	ohms	77.5 ohms	66.279 ohms
Ave.L/ft.	.21806	.22667	--	--	.21806
Ave.C/ft.	.0261	.0066334	--	--	.0261
Ave.Res/ft.	.0083972	.0067675	--	--	.0083972
TDR Length	59.999 ft	13.417 ft	--	366.22 ft	376 ft
Ind Length	59.997 ft	13.417 ft	--	NA ft	NA ft
Cap. Length	59.985 ft	13.417 ft	--	1130.5 ft	376 ft
Res. Length	59.999 ft	13.417/ft	--	NA ft	376 ft
1/V = [C/(SQR K)]	1.7602E-9	--	--	--	Instr. Adds;
Random Noise	0 volts	0 volts	--	.3 volts	0 ohms
Penetration and Insitu Test Data have test lead data subtracted				--	0 microH
Predicted R, L and C include Instr. Contribution					7.01 nf

Figure B-3. In situ test data sheet for a cable with end-instrument SP-1A-LT2 anomaly.

Cable # 1T2464I Type FR-15WW Penetration and Terminals R607/J6/f-m

Instrument TAG # SP-1A-LT4 Elevation 282'6" Date 09/14/83

Parameters	Control Cable	Penetration	Test Leads	Insitu Test	Predicted
Loop Resistance	.505 ohms	.0908 ohms	.411 ohms	1000 ohms	Open ohms
Total Inductance	13 microH	3.0412 microH	3.45 microH	Open microH	Open microH
Total Capacitance	1.59 nf	.089 nf	.594 nf	4599.3 nf	16.8236 nf
Insul. Resistance	1.75E11 ohms	ohms	.65E11 ohms	2.1E7 ohms	10E9 ohms
Dissip. Fact.	Out of Range	--	--	Out of Range	Out of Range
Prop. Delay	1.6242 ns/ft	1.5883 ns/ft	1.4845 ns/ft	1291.63 ns/ft	1.6242 ns/ft
Z1 = [SQR(L/C]	63.938 ohms	184.85 ohms	ohms	NA ohms	63.938 ohms
Z2 = 50(1+P/1-P)	66.279 ohms	ohms	ohms	77.551 ohms	66.279 ohms
Ave.L/ft.	.21806	.22667	--	--	.21806
Ave.C/ft.	.0261	.0066334	--	--	.0261
Ave.Res/ft.	.0083972	.0067675	--	--	.0083972
TDR Length	59.999 ft	13.417 ft	--	366.22 ft	376 ft
Ind Length	59.997 ft	13.417 ft	--	NA ft	NA ft
Cap. Length	59.985 ft	13.417 ft	--	175950 ft	376 ft
Res. Length	59.999 ft	13.417/ft	--	NA ft	376 ft
1/V = [C/(SQR K)]	1.7602E-9	--	--	--	Instr. Adds:
Random Noise	0 volts	0 volts	--	.0025 volts	0 ohms
Penetration and Insitu Test Data have test lead data subtracted				--	0 microH
Predicted R, L and C include Instr. Contribution					7.01 nf

Figure B-4. In situ test data sheet for a cable with end-instrument SP-1A-LT4 anomaly.

Cable # IT2464I Type FR-15WW Penetration and Terminals R607/J6/L-M

Instrument TAG # No Instr. Elevation 282'6" Date 09/14/83

Parameters	Control Cable	Penetration	Test Leads	Insitu Test	Predicted
Loop Resistance	.505 ohms	.0908 ohms	.411 ohms	Open ohms	Open ohms
Total Inductance	13 microH	3.0412 microH	3.45 microH	Open microH	Open microH
Total Capacitance	1.59 nf	.089 nf	.594 nf	10.117 nf	9.8136 nf
Insul. Resistance	1.75E11 ohms	ohms	.65E11 ohms	1.0E10 ohms	10E9 ohms
Dissip. Fact.	Out of Range	--	--	0.24	Out of Range
Prop. Delay	1.6242 ns/ft	1.5883 ns/ft	1.4845 ns/ft	1301 ns/ft	1.6242 ns/ft
Z1 = [SQR(L/C]	63.938 ohms	184.85 ohms	ohms	NA ohms	63.938 ohms
Z2 = 50(1+P/1-P)	66.279 ohms	ohms	ohms	77.5 ohms	66.279 ohms
Ave.L/ft.	.21806	.22667	--	--	.21806
Ave.C/ft.	.0261	.0066334	--	--	.0261
Ave.Res/ft.	.0083972	.0067675	--	--	.0083972
TDR Length	59.999 ft	13.417 ft	--	369.1 ft	376 ft
Ind Length	59.997 ft	13.417 ft	--	NA ft	NA ft
Cap. Length	59.985 ft	13.417 ft	--	387.62 ft	376 ft
Res. Length	59.999 ft	13.417/ft	--	NA ft	NA ft
1/V = [C/(SQR K)]	1.7602E-9	--	--	--	Instr. Adds:
Random Noise	0 volts	0 volts	--	.48 volts	0 ohms
Penetration and Insitu Test Data have test lead data subtracted				--	0 microH
Predicted R, L and C include Instr. Contribution					0 nf

Figure B-5. In situ test data sheet for a cable without an end-instrument.

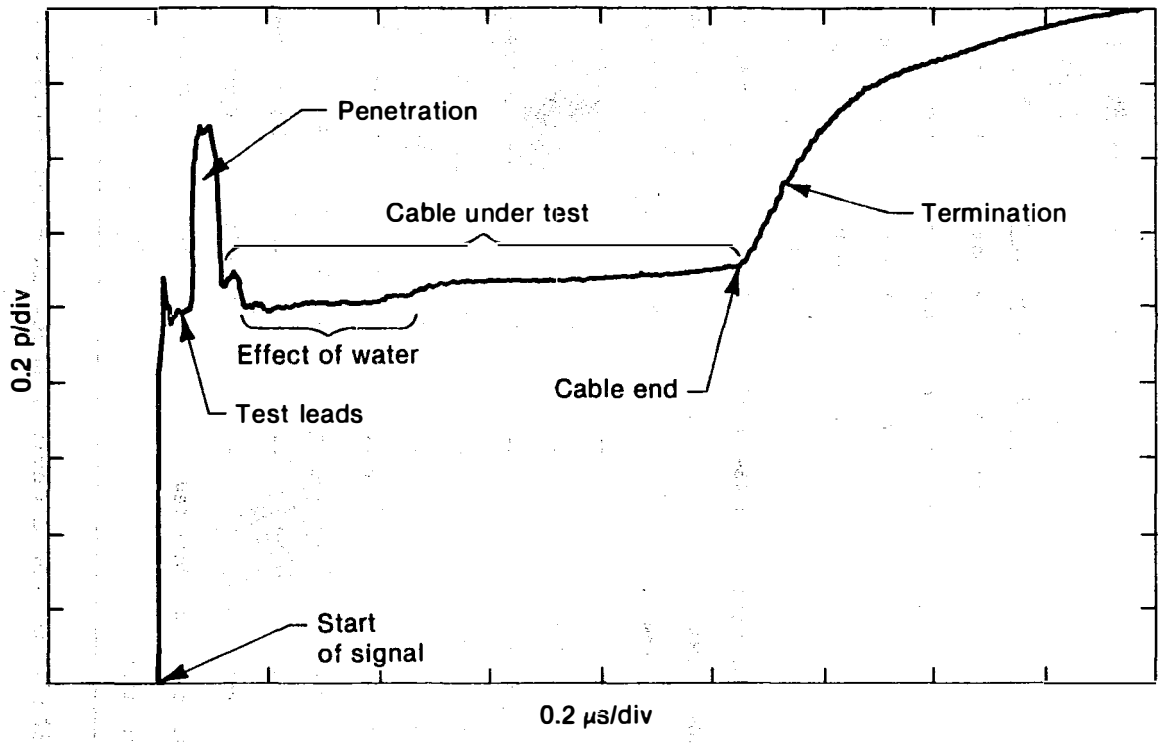

Inst. Tag #: WLDPT1207
Date: 08/29/83
Comments: R607 J9 p/n T = 1051ns RHO = 0.106p

INEL 4 0905

Figure B-6. Typical TDR display.

Cable # IT2312I Type FR-15AA Penetration and Terminals R607/J9/p-n

Instrument TAG # WDL-PT-1207 Elevation 282'6" Date 09/14/83

Parameters	Control Cable	Penetration	Test Leads	Insitu Test	Predicted
Loop Resistance	.51 ohms	.0908 ohms	.411 ohms	11700 ohms	Open ohms
Total Inductance	12.8 microH	3.0412 microH	3.45 microH	Open microH	Open microH
Total Capacitance	1.735 nf	.239 nf	.594 nf	16.957 nf	11.144224 nf
Insul. Resistance	5.0E12 ohms	ohms	.65E11 ohms	10E6 ohms	10E9 ohms
Dissip. Fact.	-.0021	--	--	1.67	-0021
Prop. Delay	1.6517 ns/ft	1.5287 ns/ft	1.4845 ns/ft	988.3 T/Time	1.6517 ns/ft
Z1 = [SQR(L/C]	85.893 ohms	112.8 ohms	ohms	NA ohms	85.893 ohms
Z2 = 50(1+P/1-P)	62.108 ohms	ohms	ohms	63.237 ohms	62.108 ohms
Ave.L/ft.	.21611	.22667	--	--	.21611
Ave.C/ft.	.028656	.017813	--	--	.028656
Ave.Res/ft.	.0085833	.0067675	--	--	.0085833
TDR Length	59.999 ft	13.417 ft	--	286.76 ft	354 ft
Ind Length	59.989 ft	13.417 ft	--	NA ft	NA ft
Cap. Length	59.994 ft	13.417 ft	--	556.85 ft	354 ft
Res. Length	59.993 ft	13.417/ft	--	NA ft	354 ft
1/V = [C/(SQR K)]	1.7637E-9	--	--	--	Instr. Adds:
Random Noise	0 volts	1 volts	--	.3 volts	0 ohms
Penetration and Insitu Test Data have test lead data subtracted				.1169 RHo	0 microH
Predicted R, L and C include Instr. Contribution					1 nf

Figure B-7. In situ test data sheet for a wet cable.

Cable # IT2312I Type FR-15AA Penetration and Terminals R607/J9/p-n

Instrument TAG # WDL-PT-1207 Elevation 282'6" Date 04/04/84

Parameters	Control Cable	Penetration	Test Leads	Insitu Test	Predicted
Loop Resistance	.51 ohms	.0908 ohms	.362 ohms	Open ohms	Open ohms
Total Inductance	12.8 microH	3.0412 microH	0 microH	Open micro	Open microH
Total Capacitance	1.735 nf	.239 nf	0 nf	15.561 nf	11.144224 nf
Insul. Resistance	5.0E12 ohms	ohms	.65E11 ohms	10E6 ohms	10E9 ohms
Dissip. Fact.	-.0021	--	--	2.233	-.0021
Prop. Delay	1.6517 ns/ft	1.5287 ns/ft	1.4845 ns/ft	1000 T/Time	1.6517 ns/ft
Z1 = [SQR(L/C]	85.893 ohms	112.8 ohms	ohms	NA ohms	85.893 ohms
Z2 = 50(1+P/1-P)	62.108 ohms	ohms	ohms	63.469 ohms	62.108 ohms
Ave.L/ft.	.21611	.22667	--	--	.21611
Ave.C/ft.	.028656	.017813	--	--	.028656
Ave.Res/ft.	.0085833	.0067675	--	--	.0085833
TDR Length	59.999 ft	13.417 ft	--	290.3 ft	354 ft
Ind Length	59.989 ft	13.417 ft	--	NA ft	NA ft
Cap. Length	59.994 ft	13.417 ft	--	508.13 ft	354 ft
Res. Length	59.993 ft	13.417/ft	--	NA ft	NA ft
1/V = [C/(SQR K)]	1.7637E-9	--	--	--	Instr. Adds;
Random Noise	0 volts	1 volts	--	.25 volts	0 ohms
Penetration and Insitu Test Data have test lead data subtracted				.1187 RHO	0 microH
Predicted R, L and C include Instr. Contribution					1 nF

Figure B-8. In situ retest data sheet for a wet cable.

cable had increased. A further comparison of this data with an overlay plot of the TDR measurements shown in Figure B-9, indicate that the wetted section of the cables has experienced some drying.

Laboratory Data Analysis Program

During the in situ tests, the insulation resistance was measured between each conductor and shield. If the cable had no shield, the system ground was used. Using this system ground resulted in an ill-defined resistance value that was used for comparison purposes only. An insulation resistance measurement can provide the following information:

- Possible indication of moisture in a cable or terminal box
- Determine if any leads are shorted together or to ground
- Data for comparison with other cables.

For this analysis, degradation of the insulation resistance was evaluated by one of the two following methods:

- For power and similar type circuits, a lower limit of resistance was used (10^6 ohm). If the measurement value was less than the lower limit, the circuit was considered degraded or anomalous.

- For instrumentation and similar type circuits, a statistical approach was used. A histogram of the measurement values was generated then analyzed for groupings that indicated "good" and "degraded" values.

The loop resistance for each cable was measured between all appropriate conductors. A loop resistance measurement can provide the following information:

- In circuits that terminate with relays or switches with open contacts, the loop resistance values do not produce useable data other than an indication of an unshorted condition.

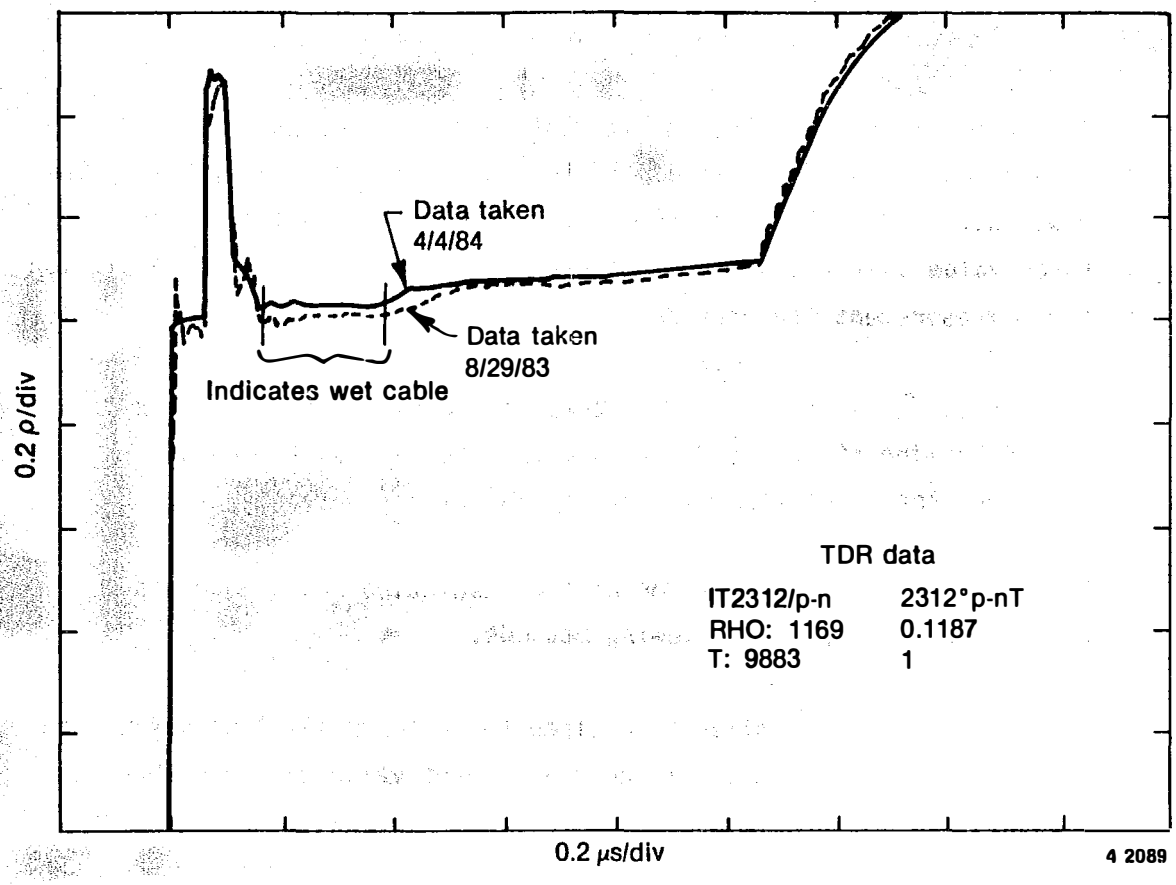

Inst. tag #: WLDPT1207
Date: 08/29/83 - 4/4/84
Comments: R607 J9/p-n

Figure B-9. TDR display showing test leads and water ingress.

- In circuits that terminate with transmitters, the loop resistances were usually large and varied with the end instruments, but did provide an indication of an open or shorted condition.

- In circuits with terminations with large resistances (motor windings, heater coils, etc) as compared to the respective cable conductors, the loop resistances were used to evaluate the terminations.

- In circuits that terminate with relays and switches with closed contacts, the loop resistance was used to evaluate the cable or terminal strip and large contact resistance.

- For cables with closed switch or relay contacts, the in situ loop resistance was compared to an expected value computed as the product of the per unit resistance (ohms/ft) measured on a control cable and the length of cable as obtained from its pull-slip. Due to uncertainty in the manufactured cable resistance and in the actual cable length, the limits were considered good when the measured values were between 0 and -25% from the expected value. These limits were derived by best estimates.

The in situ loop resistance test measurements were compared with a control cable measurement (evaluated by the same method) or statistically with other similar circuits for cases when the termination resistance is large compared to the cable resistance.

Depending on the type of termination, capacitance or inductance measurement data can provide information for determining the length of the test cable under certain conditions. For example, if the loop resistance shows an open circuit, the capacitance can indicate whether the cable is open at the termination or at the penetration.

For this investigation, degradation of the cable capacitance and/or inductance was evaluated by two methods. First, the manufacturer capacitance per foot data (where available) were compared to the in situ measurement values. Second, the measured inductance or capacitance was compared to its expected value that was obtained by a method similar to that used for the expected loop resistance. The per unit capacitance (pF/ft) or inductance (H/ft) obtained from control cable measurements was multiplied by the cable pull-slip length. Finally, the expected capacitance or inductance of the termination was added. Usually the variance for a "good" channel (as opposed to an anomaly) for this preliminary analysis was 0 and -35% for inductance and 10 and -25% for capacitance. The difference is because stray additive capacitance is likely. In some cases, limits were based on statistical analyses because of the type of end instrument component, i.e. when load impedance is larger than cable impedance.

Capacitance measurements were used as one indication of wet cable because a wet cable has higher capacitance than a dry one, provided all other conditions remain the same. Since the dielectric constant of water is about 80 times that of air and the capacitance is proportional to dielectric constant, the cable capacitance increases by an amount depending on the volume of the air void filled by water. The inductance is not affected by water because the permeability of water is the same as that of air for practical purposes.

TDR[B-1] was used to determine the characteristic impedance of each cable investigated and the approximate location of any discontinuities such as connectors, terminal strips, terminations, and cable damage. A pulse generator was used to repetitively send a voltage pulse down the cable conductor under investigation. If the pulse encounters any change, a partial reflection travels back to the sending point where it was recorded and evaluated. Figure B-6 shows a typical TDR display. The display plots the cable input voltage versus time. Since the cable input voltage is a function of the circuit impedance as the input voltage travels down the cable making up the circuit, the TDR display is a picture of how the

circuit impedance varies along the length of the circuit. Figure B-9 shows that the low impedance of the test leads is followed by the penetration which has a much higher impedance. After the penetration, the cable can be seen with its much lower impedance. At the end of the cable, the termination can be identified by its very high impedance. A point of interest in the TDR plot is the dip at the beginning of the cable. This dip illustrates the expected effects of water in a cable and is a result of the higher dielectric constant of the water compared to the air that it replaces. The same effect causes the TDR measured length to appear longer than the physical length. TDR evaluation methods provide information to show the distance to a discontinuity, the nature of the discontinuity, the total cable length, and the characteristic impedance.

The limits for the TDR length were + 5% and -15% to allow for measurement errors and the cutting of cables shorter than the pull-slip length during installation.

For this investigation, the measured characteristic impedances were compared to other in situ cables of the same type and to control cables. Those cables whose characteristic impedance were not grouped with the predominant values in a histogram, were considered as having anomalies.

Some TDR terms used in discussions of evaluations are explained as follows:

- <u>TDR length</u> - The length of a cable as calculated from the difference in the times at its beginning and end on a TDR display. The resultant time is multiplied by the propagation velocity and divided by two because the time shown on the TDR display is round trip.

- <u>Velocity of propagation</u> - The distance an electrical signal travels down a cable in a unit of time.

- <u>Characteristic impedance,</u> - The impedance seen at the input of an infinitely long lossless cable. It is also the input impedance of a lossless cable of any length when terminated by its characteristic impedance. The symbol Z_0 is usually used to denote the characteristic impedance.

REFERENCES

B-1. Hewlett-Packard Company, Time Domain Reflectometry, Application Note 62, 01909-1, 1964.

APPENDIX C

CABLE IDENTIFICATION BY PENETRATION

TABLE C-1. CABLE IDENTIFICATION FOR ELECTRICAL PENETRATIONS R400, R402, AND R407

Circuit #	Type	End Instrument/Component
S078P	FR-3N[a]	Pressurizer Heaters
S080P	FR-3N	Pressurizer Heaters
S082P	FR-3N	Pressurizer Heaters
S084P	FR-3N	Pressurizer Heaters
S086P	FR-3N	Pressurizer Heaters
S088P	FR-3N	Pressurizer Heaters
S0168P	FR-3N	Pressurizer Heaters
S0170P	FR-3N	Pressurizer Heaters
S1702P	FR-3N	Pressurizer Heaters
S0174P	FR-3N	Pressurizer Heaters
S0176P	FR-3N	Pressurizer Heaters
S0178P	FR-3N	Pressurizer Heaters
S0139P	FR-3N	Pressurizer Heaters
S0141P	FR-3N	Pressurizer Heaters
S0143P	FR-3N	Pressurizer Heaters
S0145P	FR-3N	Pressurizer Heaters
S0147P	FR-3N	Pressurizer Heaters
S0149P	FR-3N	Pressurizer Heaters
S0156P	FR-3N	Pressurizer Heaters
S0158P	FR-3N	Pressurizer Heaters
S0160P	FR-3N	Pressurizer Heaters
S0162P	FR-3N	Pressurizer Heaters
S0164P	FR-3N	Pressurizer Heaters
S066P	FR-3N	Pressurizer Heaters
SP27P	FR-3N	Pressurizer Heaters
SP29P	FR-3N	Pressurizer Heaters
SP31P	FR-3N	Pressurizer Heaters
SP129P	FR-3N	Pressurizer Heaters
SP131P	FR-3N	Pressurizer Heaters
SP133P	FR-3N	Pressurizer Heaters
SP135P	FR-3N	Pressurizer Heaters
SP137P	FR-3N	Pressurizer Heaters
SP139P	FR-3N	Pressurizer Heaters
SP142P	FR-3N	Pressurizer Heaters
SP144P	FR-3N	Pressurizer Heaters
SP146P	FR-3N	Pressurizer Heaters
SP148P	FR-3N	Pressurizer Heaters
SP150P	FR-3Y[b]	Pressurizer Heaters
SP152P	FR-3Y	Pressurizer Heaters

a. FR-3N type is 3/C #4 AWG (Kerite).
b. FR-3Y type is 7/C #4 AWG (Kerite).

TABLE C-2. CABLE IDENTIFICATION FOR ELECTRICAL PENETRATION R405

Circuit #	Type	End Instrument/Component
A123C	FR-9EE[a]	Reactor Coolant Drain Tank Pressure Hi/Lo Alarm WDL-PS-1201-1 & 3 (Static-O-Ring)
H289C	FR-9EE	RC-P-1A Oil Pressure Alarm RCP56-PS2, RCP56-PS5, RCP59-FS2 (Allis Chalmers)
H301C	FR-9EE	RC-P-2A Oil Pressure Alarm RCP56-PS7, RCP56-PS10, RCP59-FS4 (Allis Chalmers)
H337C	FR-9CC[b]	Reactor Coolant Pump Current Transformers RC-P-1A CTs (Allis Chalmers)
H359C	FR-9CC	Reactor Coolant Pump Current Transformers RC-P-2A CTs (Allis Chalmers)

a. FR-9EE type is 2/C #12 AWG (Kerite).
b. FR-9CC type is 4/C #9 AWG (Kerite).

TABLE C-3. CABLE IDENTIFICATION FOR ELECTRICAL PENETRATION R406

Circuit #	Type	End Instrument/Component
IT2347I	FR-15AA[a]	Reactor Coolant System Differential Pressure Transmitter RC14A-dPT1 Hot Leg "A" (Bailey)
IT2351I	FR-15AA[a]	Reactor Coolant System Differential Pressure Transmitter RC14B-dPT1 Hot Leg "B" (Bailey)
IT3566I	FR-13B[a]	Steam Generator Loose Parts Monitor YM-VE-7026 (Rockwell)
IT3572I	FR-13B[a]	Steam Generator Loose Parts Monitor YM-VE-7028 (Static-O-Ring)
IT3596I	FR-13B[a]	Steam Generator Loose Parts Monitor YM-VE-7024 (Rockwell)
TD 948I	FR-15EE[b]	Reactor Coolant System Dual RTD Hot Leg "A" RC4A-TE2 (Rosemount)

a. 1/C #22 AWG (Anaconda).
b. 4/C #14 AWG (Kerite).

TABLE C-4. CABLE IDENTIFICATION FOR ELECTRICAL PENETRATION R504

Circuit #	Type	End Instrument/Component
IT3519C	FR-9EE[a]	Reactor Coolant System Hot Leg "A" Pressure Switch RC-PS-7361 (Static-O-Ring)
MB 133C	FR-9HH[b]	Limit Switch on Motor Operated Valve (MOV) NS-V100 (Limitorque)
MB 149C	FR-9HH	Limit Switch on MOV CA-V4B (Limitorque)
MB 193C	FR-9HH	Limit Switch on MOV WDL-V271 (Limitorque)
MD 114C	FR-9HH	Limit Switch on MOV CF-V1B (Limitorque)
MB 200C	FR-9HH	Limit Switch on MOV CF-V115 (Limitorque)
MB 367C	FR-9HH	Limit Switch on MOV CA-V1 (Limitorque)
MB 437C	FR-9JJ[c]	Limit Switch on MOV MU-V1B (Limitorque)
MD 17C	FR-9JJ	Limit Switch on MOV CF-V1B (Limitorque)
MD 68C	FR-9JJ	Limit Switch on MOV IC-V1B (Limitorque)

a. FR-9EE type is 2/C #12 AWG (Kerite).

b. FR-9HH type is 7/C #9 AWG (Kerite).

c. FR-9JJ type is 9/C #12 AWG (Kerite).

TABLE C-5. CABLE IDENTIFICATION FOR ELECTRICAL PENETRATION R505

Circuit #	Type	End Instrument/Component
ML 78P	FR-3YY[a]	Power Cable for Motor Operated Valve (MOV) WDL-V126
MM 131P	FR-3YY	Power Cable for Motor Operated Valve (MOV) WDL-V127
MP 19P	FR-3L[b]	Power Cable for Oil Lift Pump RC-P-2B (Allis Chalmers)
MP 25P	FR-3YY	Power Cable for Backstop Lube Pump 2-2B-1 (Allis Chalmers)
MP 37P	FR-3YY	Power Cable for Backstop Lube Pump 2-2B-2 (Allis Chalmers)
MP 43P	FR-3L	Power Cable for Oil Lift Pump RC-P-2A (Allis Chalmers)
MP 45P	FR-3YY	Power Cable for Backstop Lube Pump 2-2A-1 (Allis Chalmers)
MP 51P	FR-3YY	Power Cable for Backstop Lube Pump 2-2A-2 (Allis Chalmers)
MS 88P	FR-3YY	Power Cable for MOV WDL-V7
MS 128P	FR-3YY	Power Cable for MOV CF-V2B

a. FR-3YY type is 3/C #12 AWG (Kerite).

b. FR-3L type is 3/C #10 AWG (Kerite).

TABLE C-6. CABLE IDENTIFICATION FOR ELECTRICAL PENETRATION R534

Circuit #	Type	End Instrument/Component
IT2360C	FR-13AA[a]	Out of Core Neutron Detector NI-6 (Westinghouse)
IT2362I	FR-13AA	Out of Core Neutron Detector NI-6 (Westinghouse)
IT2364I	FR-13AA	Out of Core Neutron Detector NI-6 (Westinghouse)
IT2366I	FR-15AA[b]	RCS Pressure Transmitter RC3A-PT2 Hot Leg "A" (Rosemount)
IT2368C	FR-9EE[c]	RCS Differential Pressure Transmitter RC14A-dPT2 Hot Leg "A" (Bailey)
IT2370I	FR-15AA	RCS Differential Pressure Transmitter RC14A-dPT2 Hot Leg "A" (Foxboro)
IT2472I	FR-15AA	RCS Pressure Transmitter RC3A-PT2 Hot Leg "A" (Foxboro)
IT3578I	FR-13B[d]	Loose Parts Monitor YM-VE-7018 (Static-O-Ring)
IT3581I	FR-13B	Loose Parts Monitor YM-VE-7019 (Static-O-Ring)
IT3590I	FR-13B	Loose Parts Monitor YM-VE-7022 (Static-O-Ring)
IT3599I	FR-13B	Loose Parts Monitor YM-VE-7025 (Rockwell)
IT4079I	FR-9EE	RCS Differential Pressure Transmitter RC-14B-dPT2 Hot Leg "B" (Bailey)
IT4080I	FR-15AA	RCS Differential Pressure Transmitter RC14B-dPT2 Hot Leg "B" (Bailey)
TD950I	FR-15EE	RCS Temperature Element RC4A-TE3 Dual RTD Hot Leg "A" (Rosemount)

a. FR-13AA type is 1/C #16 Triaxial (Anaconda).
b. FR-15AA type is 2/C #16 AWG Shielded (Raychem, Samuel Morris).
c. FR-9EE type is 2/C #12 AWG (Kerite).
d. FR-13B type is 1/C #22 AWG (Anaconda).

TABLE C-7. CABLE IDENTIFICATION FOR ELECTRICAL PENETRATION R506

Circuit #	Type	End Instrument/Component
H348C	FR-9CC[a]	Current Transformers for RCP-2B (Allis Chalmers)
IT2750C	FR-9EE[b]	Core Flood Tank Level Transmitter CF2-LT2 (Bailey)
IT2810C	FR-9EE	Air Handling Temperature Switch AH-TS-5024 (Penn Control)
IT3528C	FR-GG[c]	Nitrogen Manifold Pressure Switches NM-PS-4174, 4175, 1454 (Static-O-Ring)
IT2814C	FR-9EE	Air Handling Level Switch AH-LS-5006 (Gems Dv DeLaual)
IT2816C	FR-9EE	Air Handling Level Switch AH-LS-5007 (Gems Dv DeLaual)
IT2818C	FR-9EE	Air Handling Level Switch AH-LS-5008 (Gems Dv DeLaual)
IT2820C	FR-9EE	Air Handling Level Switch AH-LS-5009 (Gems Dv DeLaual)
IT3016C	FR-9JJ[d]	Intermediate Closed Cooling Liquid Monitor IC-R-1091 (Victoreen)
MC125C	FR-9EE	Limit Switch on CF-V1A (Limitorque)
MD125C	FR-9EE	Limit Switch on CF-V1B (Limitorque)
MM134C	FR-9HH[e]	Limit Switch on WDL-V127 (Limitorque)
MP313C	FR-9KK[f]	Fuel Handling Transfer Carriage FH-A-4B
MS22C	FR-9HH	Limit Switch on CF-V3B (Limitorque)
MS45C	FR-9HH	Limit Switch on RC-V3 (Limitorque)
MS69C	FR-9HH	Limit Switch on RC-V123 (Limitorque)
MS76C	FR-9HH	Limit Switch on RC-V117 (Limitorque)

TABLE C-7. (continued)

Circuit #	Type	End Instrument/Component
MS90C	FR-9HH	Limit Switch on WDL-V7 (Limitorque)
MS130C	FR-9HH	Limit Switch on CF-V2B (Limitorque)

a. FR-9CC type is 4/C #9 AWG (Kerite).

b. FR-9EE type is 2/C #12 AWG (Kerite).

c. FR-GG type is 5/C #12 AWG (Kerite).

d. FR-9JJ type is 9/C #12 AWG (Kerite).

e. FR-9HH type is 7/C #12 AWG (Kerite).

f. FR-9KK type is 12/C #12 AWG (Kerite).

TABLE C-8. CABLE IDENTIFICATION FOR ELECTRICAL PENETRATION R607

Circuit #	Type	End Instrument/Component
H279I	FR-15VVV[a]	Reactor Coolant Pump (RCP) Lube Oil System Digital Logic (Static-O-Ring) RCP58-FS7, RCP60-LS7, RCP59-FS7, RCP60-LS8, RCP56-PS16
H281I	FR-15WW[b]	RCP Oil Level Hi-Lo Alarm RC-P-1B (Allis Chalmers) RCP61-LS7A, RCP61-LS8A (Static-O-Ring)
H291I	FR-15VV[c]	RCP Lube Oil System Digital Logic RCP58-FS1, RCP60-LS1, RCP59-FS1, RCP60-LS2, RCP56-PS1 (Static-O-Ring)
H293I	FR-15WW	RCP Oil Level Hi-Lo Alarm RC-P-1A (Allis Chalmers) RCP61-LS1A, RCP61-LS2A (Static-O-Ring)
H303I	FR-15VVV	RCP Lube Oil System Logic Relays RCP58-FS3, RCP60-LS3, RCP59-FS3, RCP60-LS4, RCP56-PS6 (Static-O-Ring)
H305I	FR-15HHH[d]	RCP Oil Level Hi-Lo Alarm RC-P-2A (Allis Chalmers) RCP61-LS3A, RCP61-LS4A (Static-O-Ring)
H315I	FR-15VVV	RCP Lube Oil System Logic Relays RCP58-FS5, RCP60-LS5, RCP59-FS5, RCP60-LS6, RCP56-PS11 (Static-O-Ring)
H317I	FR-15WW	RCP Oil Level Hi-Lo Alarm RC-P-2B (Allis Chalmers) RCP61-LS5A, RCP61-LS6A (Static-O-Ring)
IT1320I	FR-15AA	R.B Cooling Coil "D" Outlet FLow Transmitter RR-FT-1028 (Foxboro)
IT1322I	FR-15AA[e]	R.B Cooling Coil "E" Outlet FLow Transmitter RR-FT-1029 (Foxboro)
IT1535I	FR-15WW	Steam Generator Level Transmitter SP-1A-LT3 and LT5 (Bailey)
IT1554I	FR-15WW	Main Steam Generator Loop Pressure Transmitter SP-6A-PT1 and SP-6B-PT1 (Foxboro)
IT1769I	FR-15AA	Reactor Coolant System (RCS) Low Range Pressure Transmitter RC-3A-PT5 (Foxboro Rosemount)
IT2074I	FR-15WW	Steam Generator Level Transmitter SP-A-LT1 (Bailey) RC22-PT1, RC22-PT2 (Foxboro)

TABLE C-8. (continued)

Circuit #	Type	End Instrument/Component
IT2310I	FR-15AA	Waste Disposal Liquid Pressure Transmitter WDL-PT-1202 (Foxboro)
IT2312I	FR-15AA	Pressure Relief Tank Level Transmitter WDL-PT-1207 (Foxboro)
IT2314I	FR-15AA	WDL Outlet Pressure Transmitter WDL-PT-1211 (Foxboro)
IT2433I	FR-15AA	Full Range Level Transmitter Steam Generator Loop "B" SP-1B-LT1 (Bailey)
IT2437I	FR-15AA	Operating Range Level Transmitter Steam Generator SP-1B-LT2 (Bailey)
IT2441I	FR-15AA	Start Up Steam Generator Level SP-1B-LT4 (Bailey)
IT2443I	FR-15AA	R.B. Emergency Cooling Water Flow Transmitter RR-FT-1025 (Foxboro)
IT2445I	FR-15AA	R.B. Emergency Cooling Water Flow Transmitter RR-FT-1026 (Foxboro)
IT2447I	FR-15AA	R.B. Emergency Cooling Water Flow Transmitter RR-FT-1027 (Foxboro)
IT2449I	FR-15AA	RCS Pressure Transmitter RC22-PT3 (Foxboro)
IT2451I	FR-15AA	RCS Pressure Transmitter RC22-PT4 (Foxboro)
IT2457I	FR-15AA	RCS Level Transmitter RC1-LT1 (Bailey)
IT2459I	FR-15WW	Steam Generator Level Transmitter SP-6A-PT2 (Foxboro)
IT2464I	FR-15WW	Steam Generator Level Transmitter SP-1A-LT2, SP-1A-LT4 (Foxboro)
IT2468I	FR-15AA	RCS Level Transmitter RCP-LT3 (Bailey)
IT2478I	FR-15AA	RCS Level Transmitter RCP-LT2 (Bailey)
IT2737I	FR-15AA	Core Flood Tank Pressure Transmitter CF1-PT1 (Bailey)

TABLE C-8. (continued)

Circuit #	Type	End Instrument/Component
IT2738I	FR-15AA	Core Flood Tank Level Transmitter CF2-LT1 (Bailey)
IT2739I	FR-15AA	Modified 09-30-82 for Airborne Particulate Monitor YM-UR-2
IT2740I	FR-15AA	No Instrument
IT2741I	FR-15AA	C. F. Pressure Transmitter CF1-PT2 (Foxboro)
IT2742I	FR-15AA	C. F. Pressure Transmitter CF2-PT2 (Bailey)
IT2743I	FR-15AA	C. F. Pressure Transmitter CF1-PT4 (Foxboro)
IT2744I	FR-15AA	C. F. Level Transmitter CF2-LT4 (Bailey)
IT2822I	FR-15AA	Intermediate Closed Cooling Differential Pressure Transmitter IC10-dPT (Bailey)
IT3079I	FR-15BB[f]	No Instrument
IT3080I	FR-15BB	RCS Return Flow Transmitter MU10-FT2 (Brooks)
IT3081I	FR-15BB	RCS Return Flow Transmitter MU10-FT3 (Brooks)
IT3082I	FR-15BB	RCS Return Flow Transmitter MU10-FT4 (Brooks)
IT4078I	FR-15AA	Main Steam Generator Loop "B" Pressure Transmitter SP-6B-PT1 (Foxboro)
IT4119I	FR-15AA	RCP Seal Cavity Pressure Transmitter RC-22-PT5 (Foxboro)
IT4121I	FR-15AA	RCP Seal Cavity Pressure Transmitter RC-22-PT6 (Foxboro)
IT4123I	FR-15AA	RCP Seal Cavity Pressure Transmitter RC-22-PT7 (Foxboro)
IT4125I	FR-15AA	RCP Seal Cavity Pressure Transmitter RC-22-PT8 (Foxboro)
IT4050I	FR-15DD	RCS Vibration Monitor RC-VE-7887, 7888, 7889, 7900, 7901 (IRD)
IT4057I	FR-15DD	RCS Vibration Monitor RC-VE-7892, 7893, 7894, 7895, 7896 (IRD)

TABLE C-8. (continued)

Circuit #	Type	End Instrument/Component
IT4064I	FR-15DD[g]	RCS Vibration Monitor RC-VE-7892, 7893, 7894, 7895, 7896 (IRD)
IT4071I	FR-15DD	RCS Vibration Monitor RC-VE-7902, 7903, 7904, 7905, 7906 (IRD)

a. FR-15VVV type is 6/C (3-PR) #16 AWG Tws and Shld (Spec Jacket) (Anaconda).

b. FR-15WW type is 6/C (3-PR) #16 AWG Tws and Shld (Anaconda).

c. FR-15VV type is 12/C (6-PR) #16 AWG Tws and Shld (Spec Jacket) (Anaconda).

d. FR-15HHH type is 6/C #16 AWG Shielded (Spec Jacket) Anaconda).

e. FR-15AA type is 2/C #16 AWG Shielded (Raychem, Anaconda, Samuel Morris).

f. FR-15BB type is 3/C #16 AWG Shielded (Anaconda).

g. FR-15DD type is 18/C (9-PR) #16 AWG Tws and Shld (Anaconda).